RFE Series Electronic Automatic Transmission Operation and Diagnosis

Book 2.

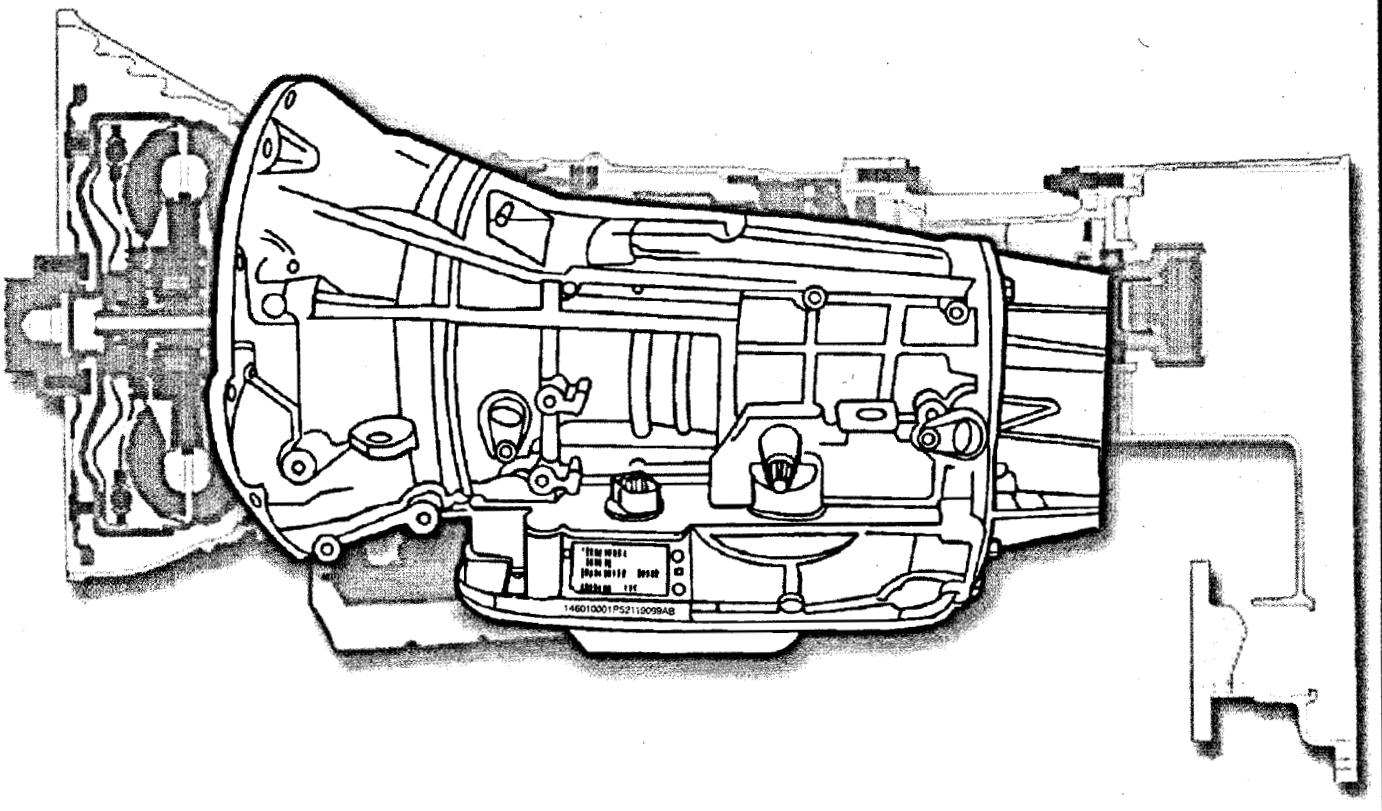

DCA

DAIMLERCHRYSLER ACADEMY
School of Technical Training

Student Workbook

SAFETY NOTICE

This publication's purpose is to provide Technical training information to individuals in the automotive trade. All test and repair procedures must be performed in accordance with manufacturers service and diagnostic manuals. All ***warnings, cautions,*** and ***notes*** must be observed for safety reasons. The following is a list of general guidelines:

- Proper service and repair is critical to the safe, reliable operation of all motor vehicles.
- The information in this publication has been developed for service personnel, and can help when diagnosing and performing vehicle repairs.
- Some service procedures require the use of special tools. These special tools must be used as recommended throughout this Technical Training Publication, the diagnostic Manual, and the Service Manual.
- Special attention should be exercised when working with spring-or tension-loaded fasteners and devices such as E-Clips, Cir-clips, Snap rings, etc., careless removal may cause personal injury.
- Always wear safety goggles when working on vehicles or vehicle components.
- Improper service methods may damage the vehicle or render it unsafe.
- Observe all ***warnings*** to avoid the risk of personal injury.
- Observe all ***cautions*** to avoid damage to equipment and vehicle.
- ***Notes*** are intended to add clarity and should help make your job easier.

Cautions and ***Warnings*** cover only the situations and procedures DaimlerChrysler Corporation has encountered and recommended. Neither DaimlerChrysler Corporation nor its subsidiaries or affiliates cannot know, evaluate, and advise the service trade of all conceivable ways in which service may be performed, or of the possible hazards for each. Consequently, DaimlerChrysler Corporation and its subsidiaries and affiliates have not undertaken any such broad service review. Accordingly, anyone who used a service procedure or tool that is not recommended in this publication, must be certain that neither personal safety, nor vehicle safety, is jeopardized by the service methods they select.

MASTERTECH

RFE Series Electronic Automatic Transmission Operation and Diagnosis

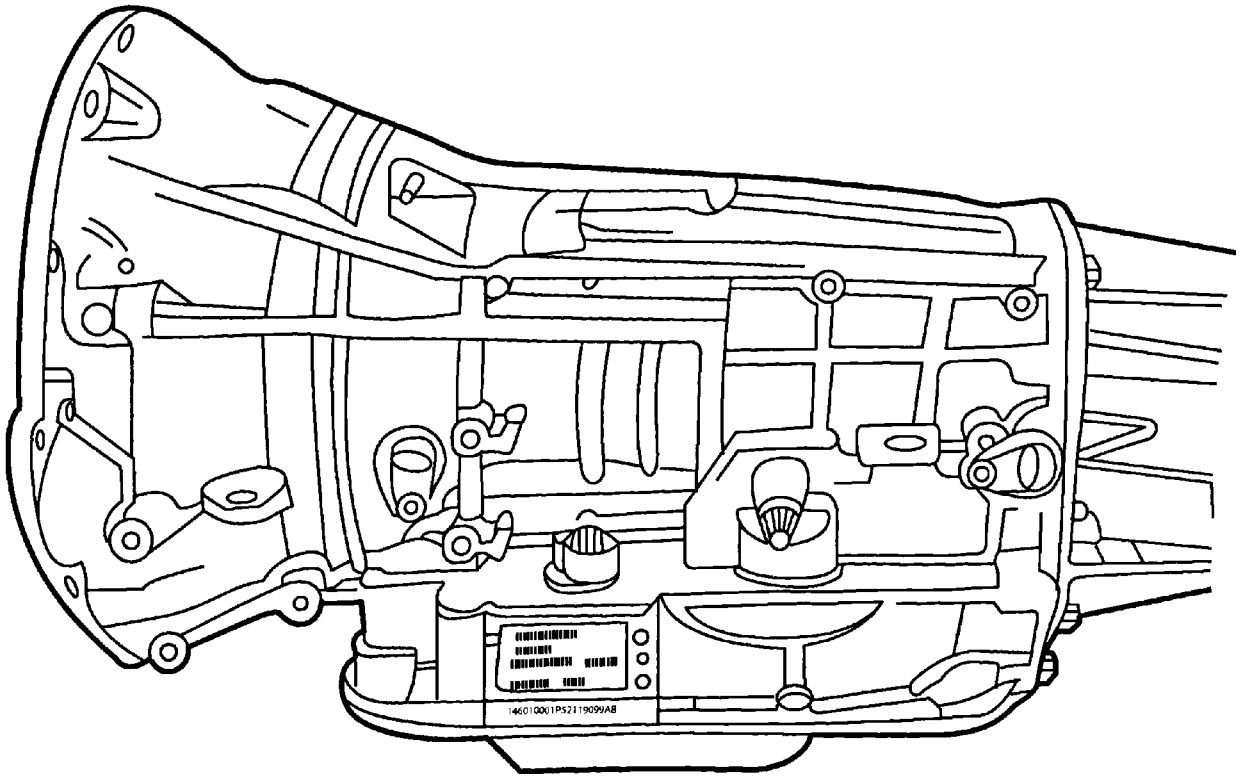

RFE Series Electronic Automatic Transmission Operation and Diagnosis

RFE Series Electronic Automatic Transmission Operation and Diagnosis

TABLE OF CONTENTS

TABLE OF CONTENTS (CONTINUED)

TABLE OF CONTENTS (CONTINUED)

TABLE OF CONTENTS (CONTINUED)

RFE Series Electronic Automatic Transmission Operation and Diagnosis

INTRODUCTION AND OBJECTIVES

INTRODUCTION

This course provides an in-depth study of the electronic, hydraulic, and mechanical control systems of the RFE series transmissions. The goal of this course is to provide the technician with information that supports a solid, fundamental diagnostic process by which a transmission concern can be successfully corrected.

The RFE series transmissions are found on the following DaimlerChrysler vehicles:

- Dakota 45RFE/545RFE
- Durango 45RFE/545RFE
- DR Pick-Up 45RFE/545RFE
- Liberty 45RFE
- Grand Cherokee 545RFE

RFE Series Electronic Automatic Transmission Operation and Diagnosis

This course contains eight modules of training information:

- Module 1 RFE Series Transmissions – Covers transmission identification.
- Module 2 Mechanical and Hydraulic Components – Covers the information necessary to properly identify the clutches, pumps and gears of the transmission. Identifies the valve bodies and their components and the solenoid/pressure switch assembly.
- Module 3 Planetary Gear Train Operation - Identifies power flow for gear sets found in DaimlerChrysler automatic transmissions.
- Module 4 Hydraulic Flow – Identfies hydraulic flow in the RFE series transmissions.
- Module 5 Transmission Control Module – Covers the information necessary to properly identify the TCM.
- Module 6 Electronic Inputs and Outputs – Identifies the direct and indirect inputs and outputs to the TCM.
- Module 7 Diagnostic Management System - Identifies some of the diagnostic functions of the DRBIII®.
- Module 8 Diagnostics – Covers the diagnostic process to be used in effectively correcting a customer concern.

COURSE OBJECTIVES

After completing this course, a technician will be able to:

- Identify all transmission mechanical components.
- Identify and describe all hydraulic components.
- Identify the hydraulic flow and solenoid actuation necessary to achieve all gear ratios.
- Diagnose the hydraulic malfunctions.
- Demonstrate all gear ratios.
- Read DTCs, identify the TCM with a DRBIII®, retrieve the part number and software version, read CVIs and perform a Quick Learn.
- Perform all electrical related DRB activities to identify all direct and indirect inputs and outputs and bus communication.
- Interpret the appropriate shift and EMCC schedules and determine whether there is a malfunction or if the vehicle is operating properly.
- Diagnose and recommend the proper steps needed to repair each symptom.

ACRONYMS

The acronyms listed here are used throughout this course.

- 2C — Second Clutch or Solenoid
- 4C — Fourth Clutch or Solenoid
- APPS — Accelerator Pedal Position Signal
- AWD — All-Wheel Drive
- BCM — Body Control Module
- BTS — Battery Temperature Sensor
- CARB — California Air Resources Board
- CC — Converter Clutch
- CKP — Crankshaft Position (Sensor)
- CPU — Central Processing Unit
- CVI — Clutch Volume Index
- DRBIII® — Diagnostic Readout Box
- DLC — Data Link Connector
- DTC — Diagnostic Trouble Code
- EATX — Electronic Automatic Transmission
- EC — Error Counters
- ECT — Engine Coolant Temperature (Sensor)
- EF — Error Flags
- EMCC — Electronically-Modulated Converter Clutch
- FEMCC — Full Electronically-Modulated Converter Clutch
- F/S — Fail Safe
- IAC — Idle Air Control (Motor)
- ICS — Ignition Control Circuit

ACRONYMS (CONTINUED)

- IPM — Integrated Power Module
- LPS — Line Pressure Sensor
- L/R — Low Reverse Clutch
- LR/CC — Low Reverse/Converter Clutch Solenoid
- MAP — Manifold Absolute Pressure (Sensor)
- MIL — Malfunction Indicator Lamp
- MS — Multi Select Solenoid
- NGC — Next Generation Controller
- NTC — Negative Temperature Coefficient
- OBDII — On Board Diagnostics Level II
- OD — Overdrive Clutch or Solenoid
- ORC — Overrunning Clutch
- OTGR — Overall Top Gear Ratio
- PCI — Programmable Communication Interface
- PCM — Powertrain Control Module
- PCS — Pressure Control Solenoid
- PDC — Power Distribution Center
- PEMCC — Partially Electronically-Modulated Converter Clutch
- PWM — Pulse Width Modulated
- REV — Reverse, Reverse Clutch
- RFE — 45RFE, 545RFE
- RWD — Rear Wheel Drive
- SLP — Shift Lever Position
- SSV — Solenoid Switch Valve
- TCC — Torque Converter Clutch
- TCM — Transmission Control Module
- TCR — Transmission Control Relay
- TPS — Throttle Position Sensor

ACRONYMS (CONTINUED)

- TRD — Torque Reduction Link
- TRS — Transmission Range Sensor
- TSB — Technical Service Bulletin
- TTS — Transmission Temperature Sensor
- UD — Underdrive Clutch or Solenoid
- VPWM — Variable Pulse Width Modulation
- VSS — Vehicle Speed Sensor

MODULE 1 RFE SERIES TRANSMISSIONS

The electronic transmission can be broken down into three major areas of control:

- **The mechanical portion** – Mechanical components allow the transfer of torque through gears, clutches, and rotating shafts.
- **The hydraulic portion** – Hydraulic fluid supplies the necessary pressure to move a piston or valve in the transmission to link the electric portion to the mechanical portion.
- **The electrical/electronic portion** – The electrical/electronic portion provides the means to give full and direct control of the clutches. It optimizes shift quality, fuel economy, adaptation for conditions, and driver preference.

The key to understanding and successfully diagnosing the transmission is dependent on the technician's ability to see the three areas of transmission operation not as independent of each other, but working together. It is also important to understand that many concerns can be easily identified and corrected by simply checking the condition of the fluid or making a mechanical adjustment prior to performing a lengthy diagnosis. Using the correct diagnostic process eliminates unnecessary steps that might otherwise be performed.

RFE Series Electronic Automatic Transmission Operation and Diagnosis

There are two types of transmissions referenced in this course. They are:

- 45RFE
- 545RFE

The 45RFE and 545RFE transmissions are going to be referred to as **RFE series.**

Each character in the name of the transmission has a specific meaning and helps identify the transmission type.

45RFE

- **4** - Four forward speeds
- **5** - Duty rating
- **R** - Rear wheel drive
- **FE** - Fully electronic

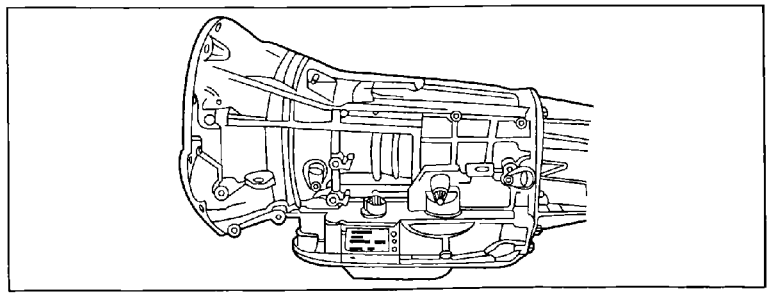

545RFE

- **5** - Number of forward gears
- **4** - Four forward speeds
- **5** - Duty rating
- **R** - Rear wheel drive
- **FE** - Fully electronic

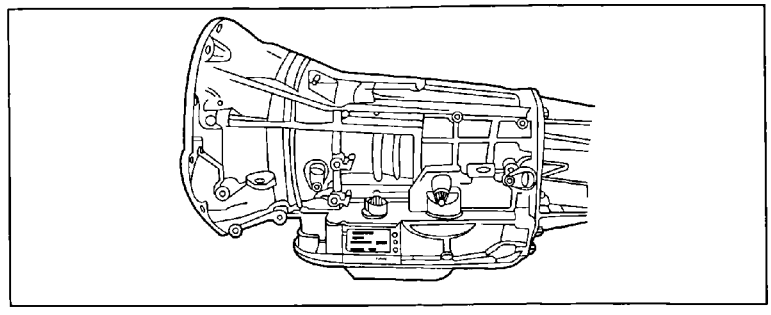

The RFE also has a unique 23-pin connector at the solenoid/pressure switch assembly and also uses a closed-loop line pressure control system. The main regulator and torque converter valves are located in the transmission oil pump (which is a dual stage oil pump). The RFE also has unique 4-2 kick-down gear.

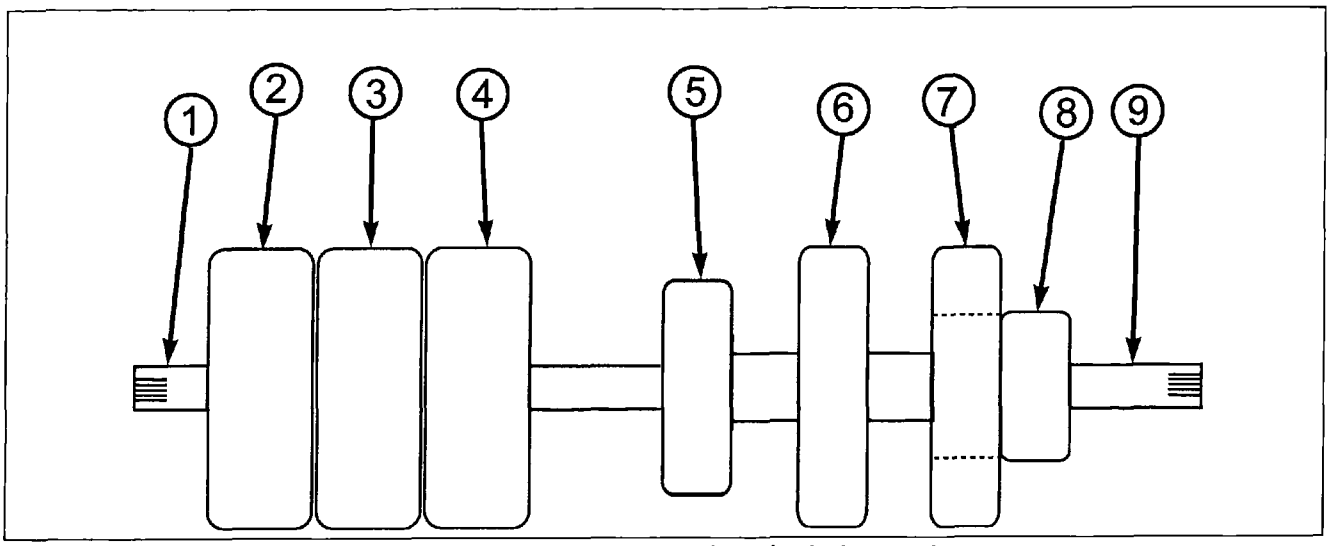

Figure 1 RFE Series Clutch Orientation

1	Input Shaft	6	2C Clutch
2	Underdrive Clutch	7	L/R Clutch
3	Overdrive Clutch	8	Overrunning Clutch
4	Reverse Clutch	9	Output Shaft
5	4C Clutch		

RFE Series Electronic Automatic Transmission Operation and Diagnosis

RFE SERIES OVERVIEW

The RFE transmission is an electronically controlled multi-range transmission that combines optimized gear ratios, state of the art efficiency and driver adaptive shifting. Three planetary gear sets provide wide ratio capability for optimum vehicle performance.

The three planetary gear sets in the RFE allow for a unique Second gear ratio. The normal Second gear ratio (1.67) is used for through-gear accelerations. An alternate Second gear ratio (Second Prime 1.50) allows for smoother 4-2 kick-downs at higher RPMs. The Second Prime gear ratio also provides increased passing performance over a wider range of highway cruising speeds.

Primary mechanical components of the RFE include three multiple disc input clutches, three multiple disc holding clutches, one mechanical overrunning clutch, five hydraulic accumulators, three planetary gear sets, a dual stage hydraulic oil pump, valve body and a solenoid/pressure switch assembly.

The TCM for the RFE is the main component of the electronic control system. The TCM is going to be covered in detail later on during the course.

Normal operation of the RFE includes electronic control of up shifts and down shifts utilizing real-time adaptive closed-loop shift and line pressure controls.

Gear ratios for the RFE are as follows:

- **First gear** 3.00 : 1
- **Second gear** 1.67 : 1
- **Second prime** 1.50 : 1
- **Third gear** 1.00 : 1
- **Fourth gear** 0.75 : 1
- **Fifth gear** 0.67 : 1
- **Reverse gear** 3.00 : 1

A detailed explanation of related components is covered later in the course.

MODULE 2 MECHANICAL AND HYDRAULIC COMPONENTS

TORQUE CONVERTER

The TCC is hydraulically operated and electronically controlled. The TCC consists of a piston and a friction disc that provide a direct 1:1 mechanical link between the impeller and turbine when slippage is inefficient or becomes unnecessary. When the TCC piston is applied, torque converter engagement is obtained. The gears available when the torque converter can be locked are Third and OD for full lock-up and Second, Third and OD for partial lock-up.

The hub of the torque converter housing also drives the transmission oil pump at all engine speeds.

Caution: The torque converter must be replaced if a transmission failure resulted in large amounts of metal or fiber contamination in the fluid.

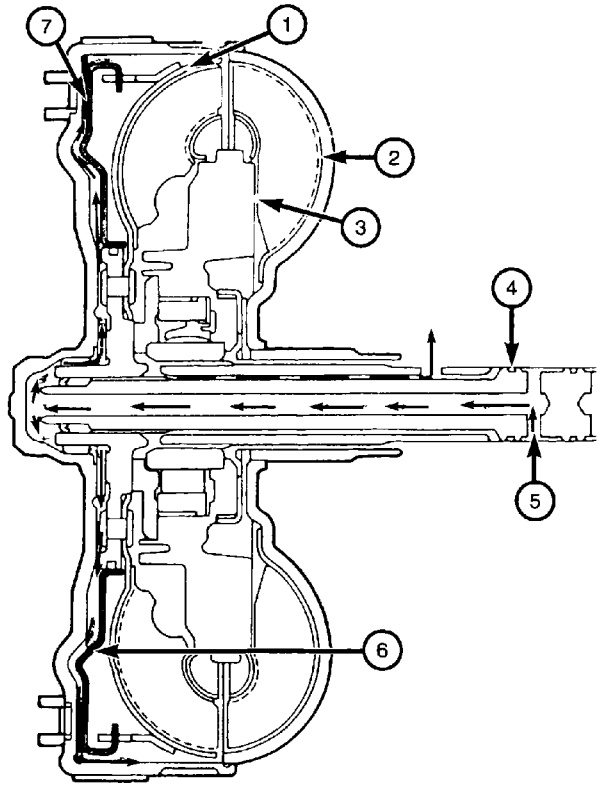

Figure 2 Torque Converter

1	Turbine	5	Release Pressure
2	Impeller	6	The Piston Moves Slightly Rearward
3	Stator	7	Clutch Disc
4	Input Shaft		

RFE SERIES MECHANICAL COMPONENTS

Oil Pump

The oil pump consists of two driven gears (primary and secondary), which are driven by the torque converter hub through a central drive gear.

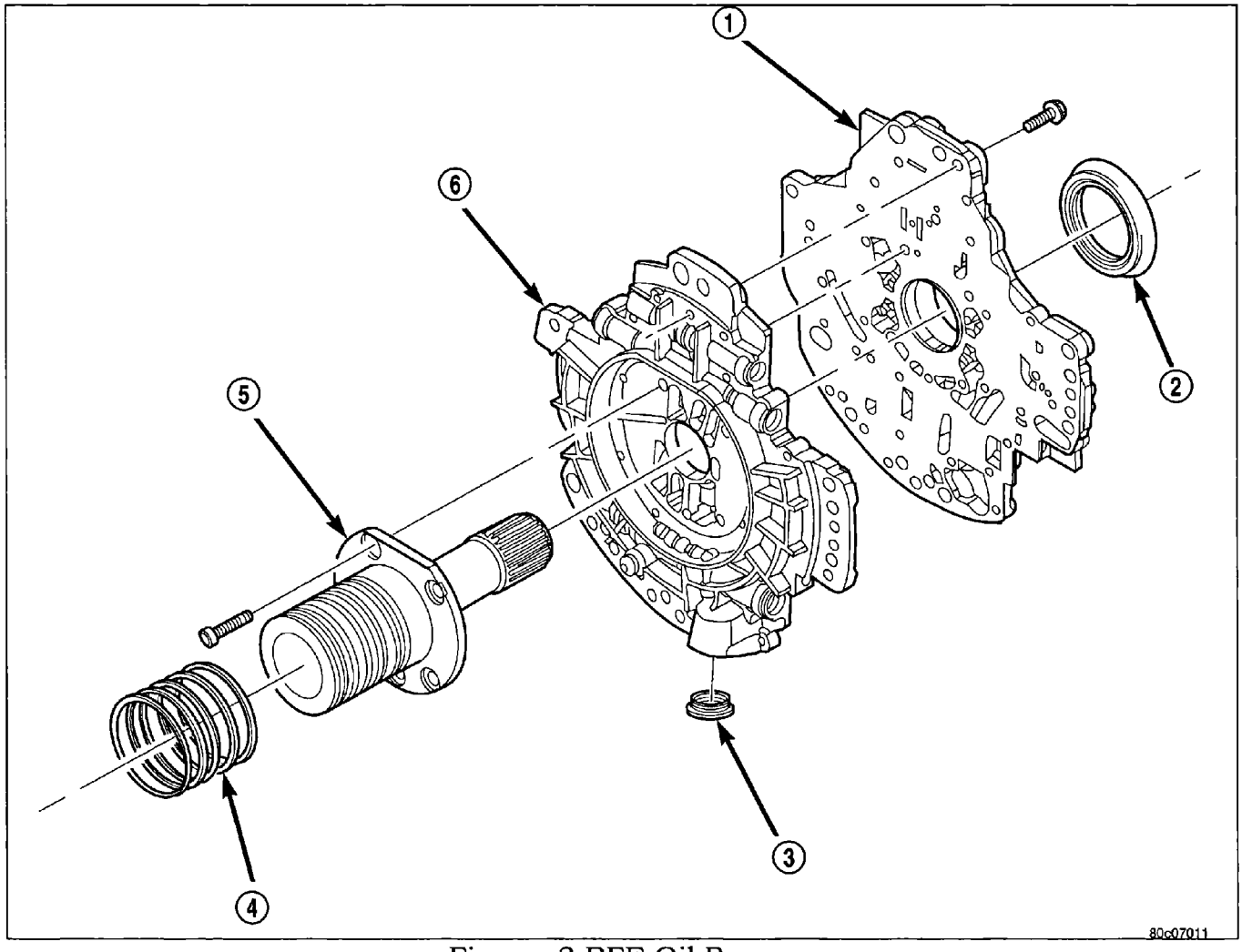

Figure 3 RFE Oil Pump

1	Pump Housing	4	Seal Ring (5)
2	Seal	5	Reaction Shaft Support
3	Oil Filter Seal	6	Pump Valve Body

When the driven gears rotate, the rotating gear teeth create a low pressure area between the teeth and atmospheric pressure in the oil sump forces the oil through the filter to fill the low pressure area.

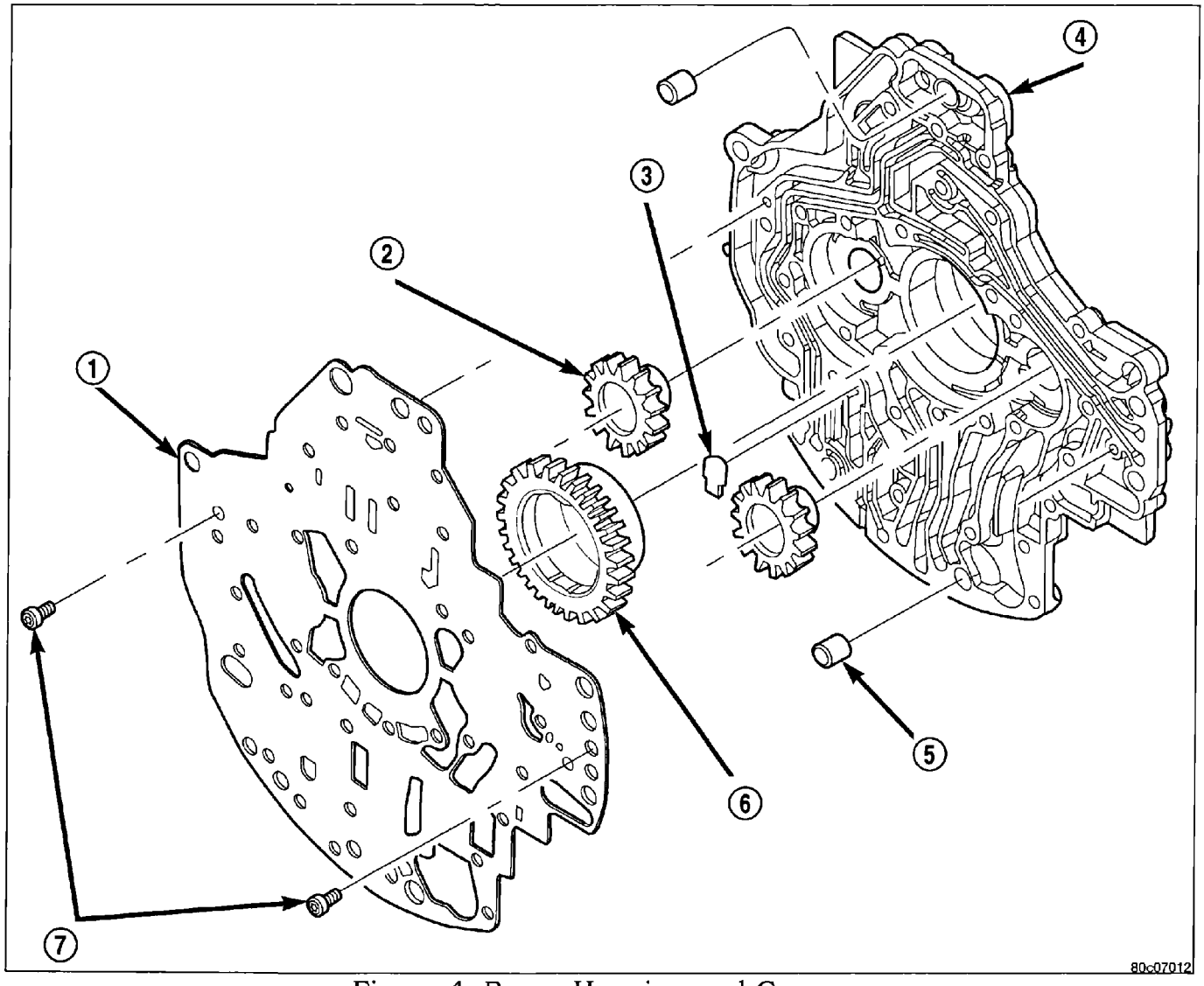

Figure 4 Pump Housing and Gears

1	Separator Plate	5	Dowel (2)
2	Driven Gear (2)	6	Drive Gear
3	Check Valve	7	Screws
4	Pump Housing		

As the gears rotate and come back into mesh, pressurized fluid is forced into the pump outlet and to the valves in the oil pump. At low speeds, both driven gears supply fluid to the transmission. As speed increases, flow from the primary driven gear becomes sufficient to meet the transmission fluid system demand and flow from the secondary driven gear is recirculated through the main pressure regulator valve. Once secondary flow is recirculated, the check valve located between the pump outlet closes and the primary driven gear supplies all the fluid to the transmission.

Located inside the transmission oil pump valve body are valves used to control or limit hydraulic pressure in the transmission and torque converter.

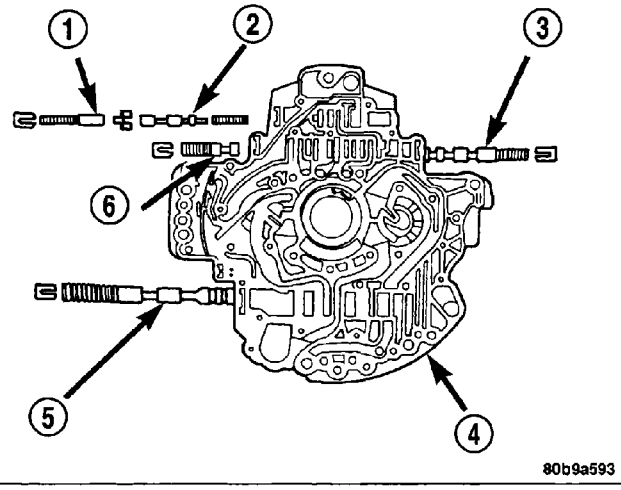

Figure 5 RFE Series Pump

1	T/C Clutch Accumulator Valve	4	Pump Valve Body
2	T/C Clutch Control Valve	5	Pressure Regulator Valve
3	T/C Clutch Switch Valve	6	T/C Clutch Limit Valve

The main pressure regulator valve controls line pressure. In case of a limp-in condition, the pressure regulator valve sets line pressure to its maximum value.

The torque converter limit valve is needed to regulate fluid pressure to the torque converter.

CLUTCHES

There are six hydraulically applied clutches and one mechanical overrunning clutch used in the RFE transmission. There are three input clutches used to drive planetary components: UD, OD and reverse clutches. These clutches are contained within the input clutch assembly.

ACTIVITY 2.1 RFE SERIES CLUTCH IDENTIFICATION

Using the Service Information and the bench unit, place the matching component number in the blanks provided.

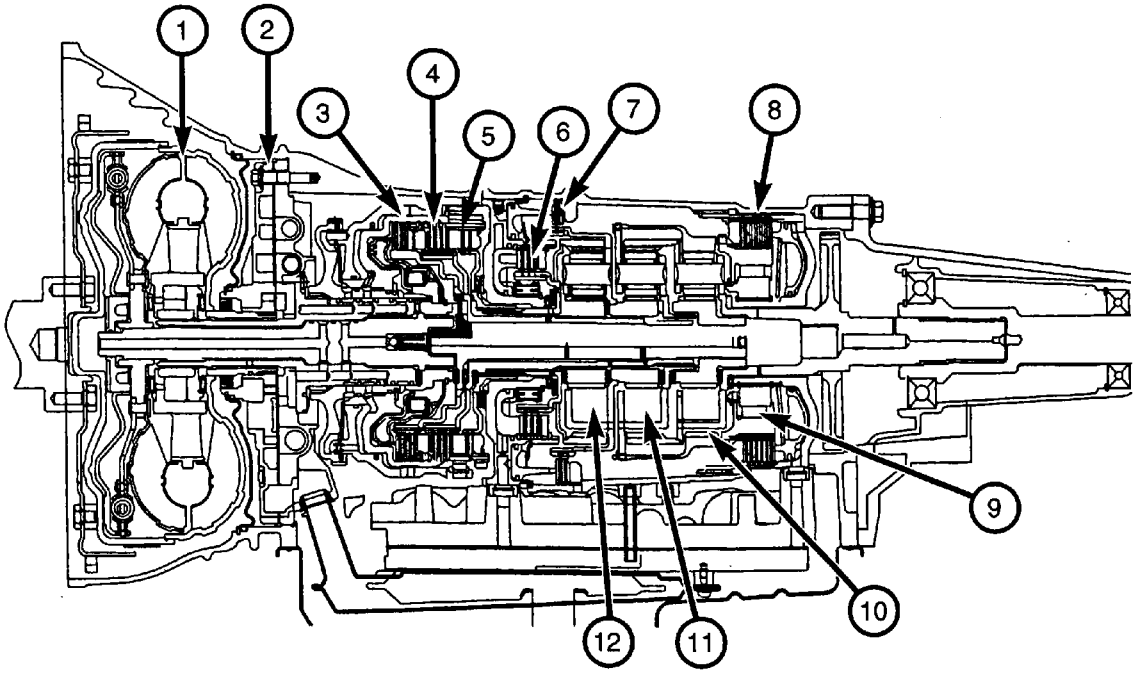

_____ Low Reverse Clutch

_____ 4C Clutch

_____ Overdrive Clutch

_____ Torque Converter

_____Fluid Pump

_____Reverse Planetary

_____ Underdrive Clutch

_____ Reverse Clutch

_____ 2C Clutch

_____Input Planetary

_____Overrun Clutch

_____ Reaction Planetary

RFE SERIES HYDRAULIC COMPONENTS

Valve Body Assembly

The main valve body contains three valves, five accumulators, seven check balls, and a solenoid/pressure switch assembly that controls fluid delivery to the frictional clutches.

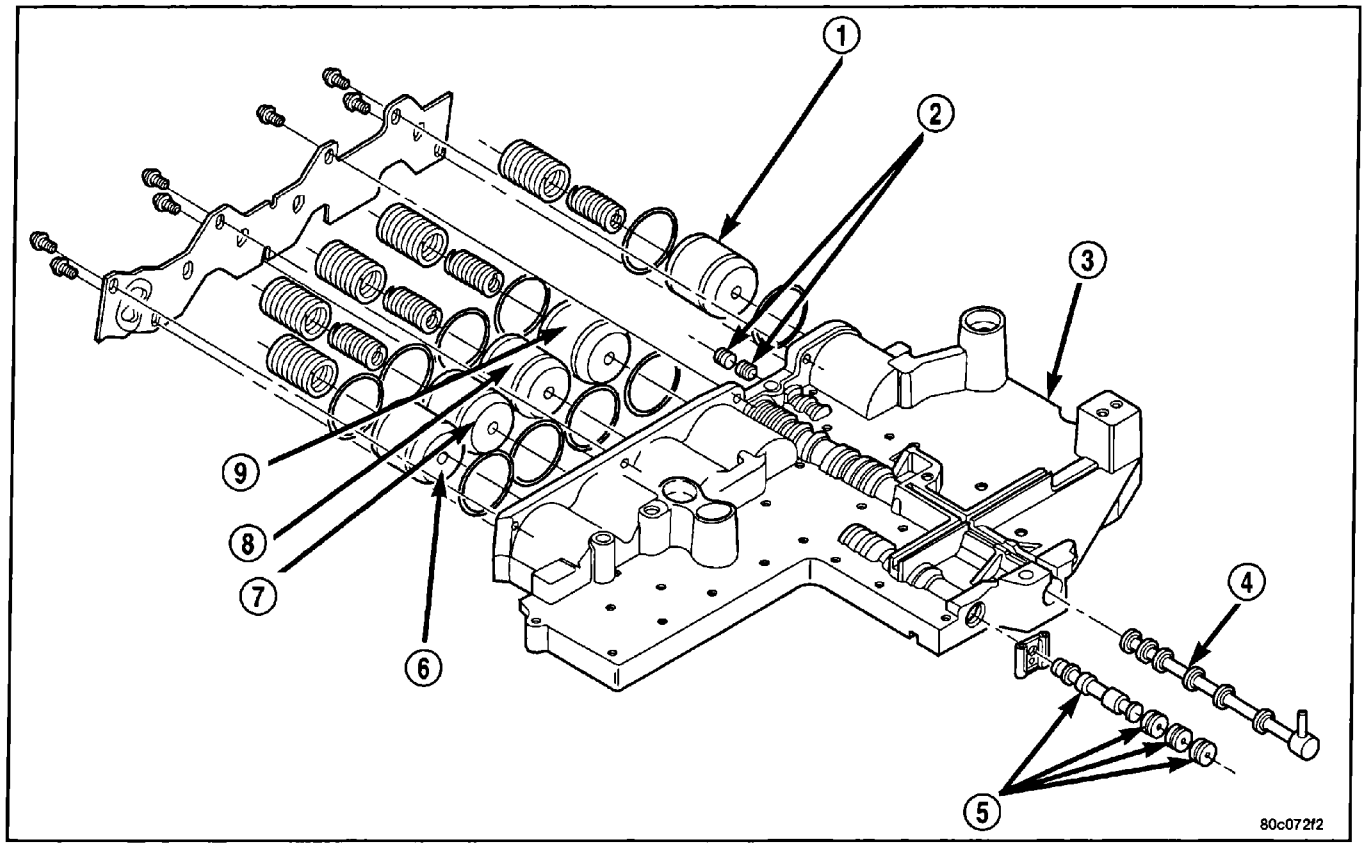

Figure 6 Valve Body Assembly

1	Low/Reverse Accumulator	6	Overdrive Accumulator
2	Low/Reverse Switch Valve and Plug	7	Underdrive Accumulator
3	Upper Valve Body	8	4C Accumulator
4	Manual Valve	9	2C Accumulator
5	Solenoid Switch Valve and Plugs		

Pressure Switches

The pressure switches in the solenoid/pressure switch assembly supply information to the TCM. When pressure is applied to a hydraulic circuit where there is a pressure switch, the switch is forced on or in a closed position. The switches do not tell the TCM how much pressure there is in a circuit, but rather that pressure does exist. Basically, the switches confirm to the TCM that the intended solenoid action did occur. They can be used to determine a hydraulic problem.

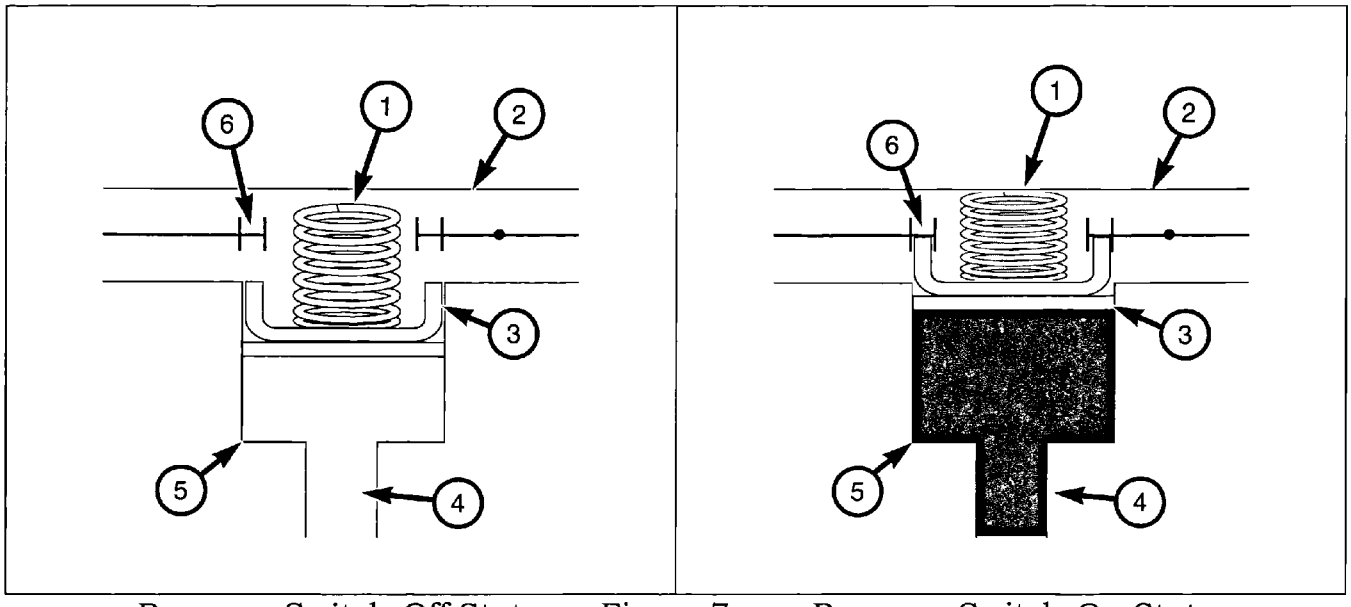

Pressure Switch-Off State Figure 7 Pressure Switch-On State

1	Spring	4	Hydraulic Channel
2	Cap	5	Switch Chamber
3	Diaphragm	6	Electrical Contact

Solenoids

Seven solenoids are used in the RFE transmission solenoid/pressure switch assembly. The UD, OD, 4C, 2C, LR and multi-select solenoids are used to control the application of the clutch elements. Also located on the solenoid/pressure switch assembly is the pressure control solenoid. There are normally applied solenoids and normally vented solenoids used. The MS and UD solenoids are normally applied. The LR/CC, OD, 4C, and 2C solenoids are normally vented.

In the event of a transmission electrical failure, a limp-in mode procedure is programmed into the TCM. To achieve limp-in mode, only Park, Neutral, Reverse and Third gear are available if the transmission is in the drive position and Second gear if in 2 or L.

Normally Vented Solenoid

A normally vented solenoid blocks fluid from its associated clutch when the solenoid is in its off state. When the normally vented solenoid is energized, fluid pressure is applied to its associated clutch.

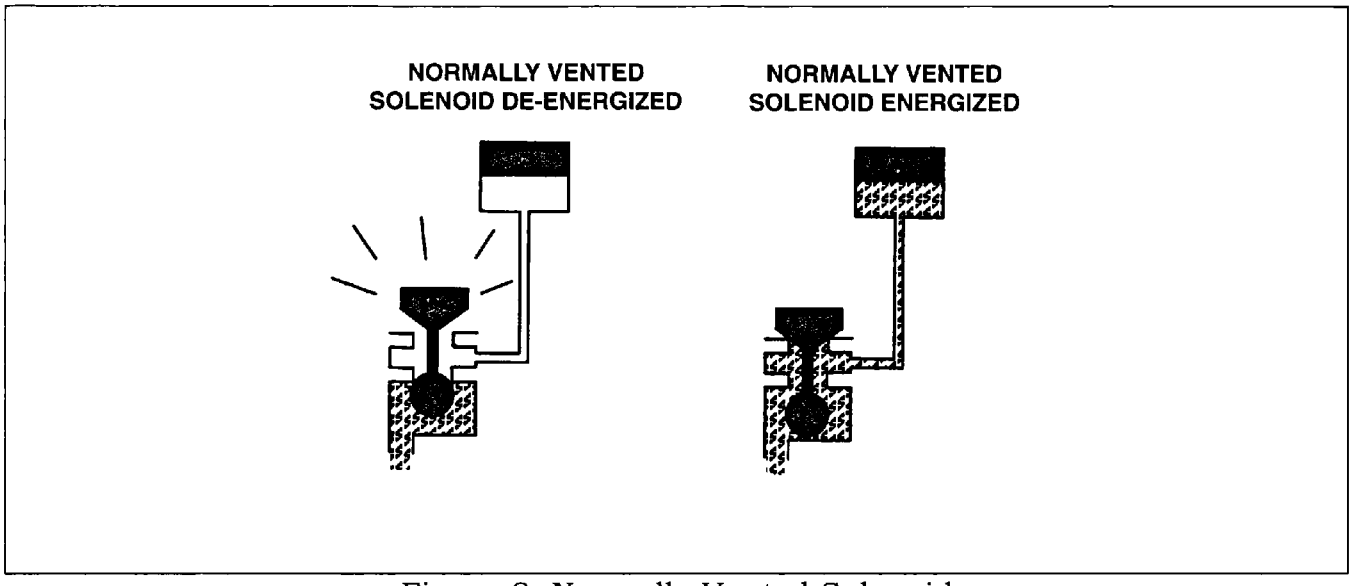

Figure 8 Normally Vented Solenoid

Normally Applied Solenoid

A normally applied solenoid applies fluid to its associated clutch when the solenoid is in its off state. When the normally applied solenoid is energized, fluid pressure vents from its associated clutch.

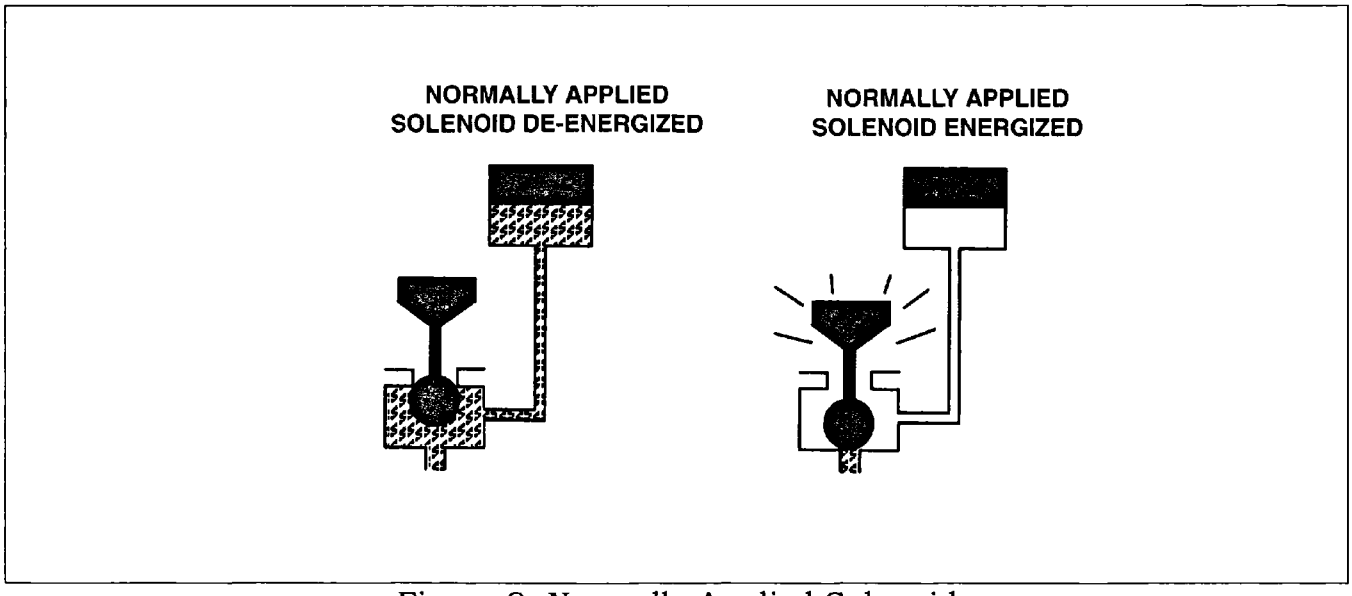

Figure 9 Normally Applied Solenoid

ACTIVITY 2.2 HYDRAULIC COMPONENT IDENTIFICATION RFE SERIES

Using the Service Information and the bench unit, match the numbers to the valves and check balls of the valve body and oil pump listed below.

_____ Underdrive Accumulator ____ L/R Accumulator ____ Manual Valve

_____ Overdrive Accumulator ____ Solenoid Switch Valve ____ 4C Accumulator

_____ Upper Valve Body ____ L/R Switch Valve ____ 2C Accumulator

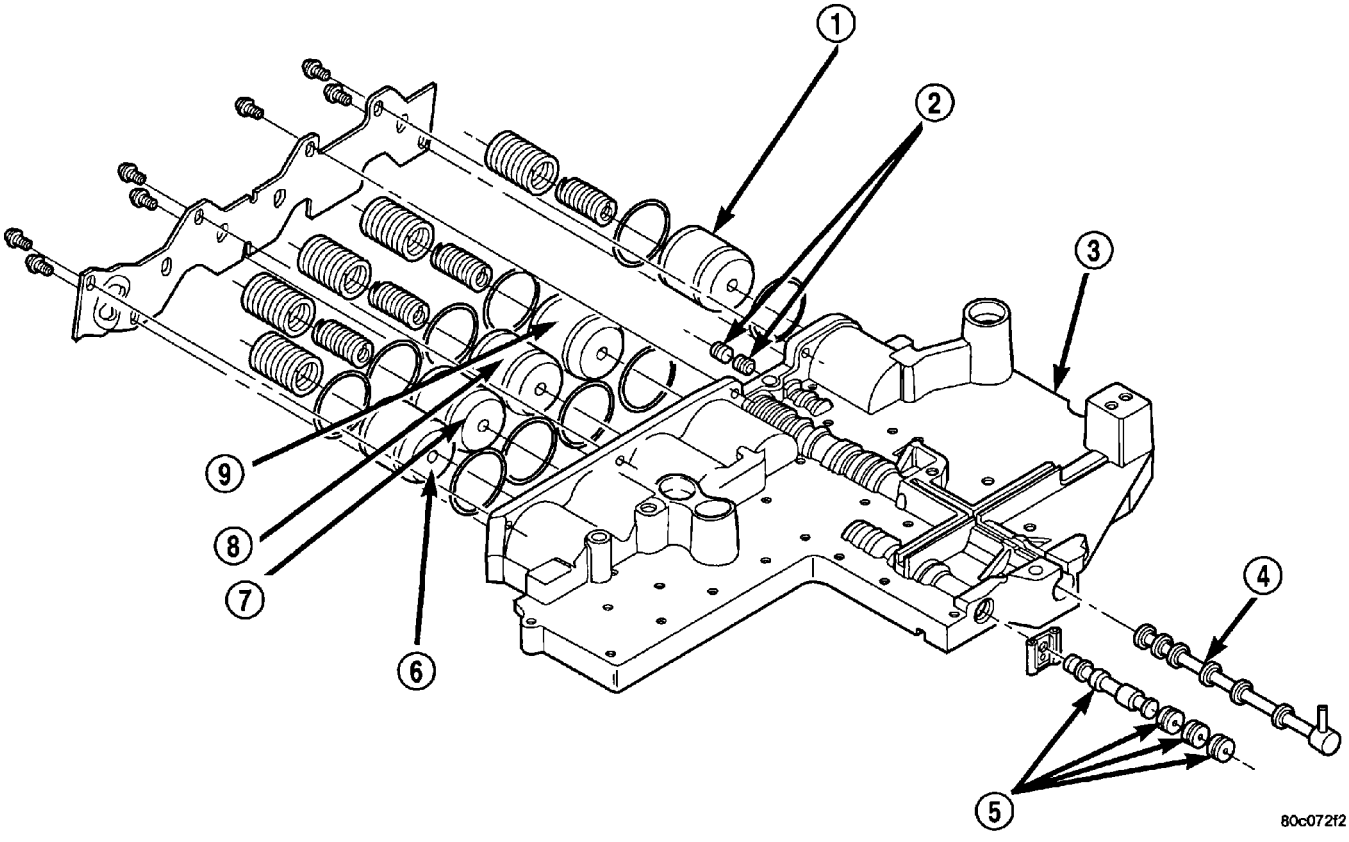

ACTIVITY 2. HYDRAULIC COMPONENT IDENTIFICATION RFE SERIES (CONTINUED)

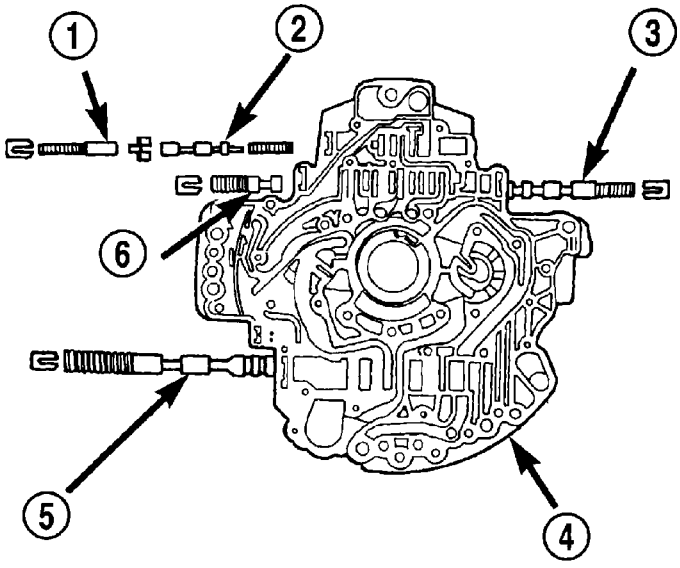

80b9a593

_____T/C Clutch Switch Valve

_____ Pressure Regulator Valve

_____ T/C Clutch Limit Valve

_____ Pump Valve Body

_____ T/C Accumulator Valve

_____ T/C Clutch Control Valve

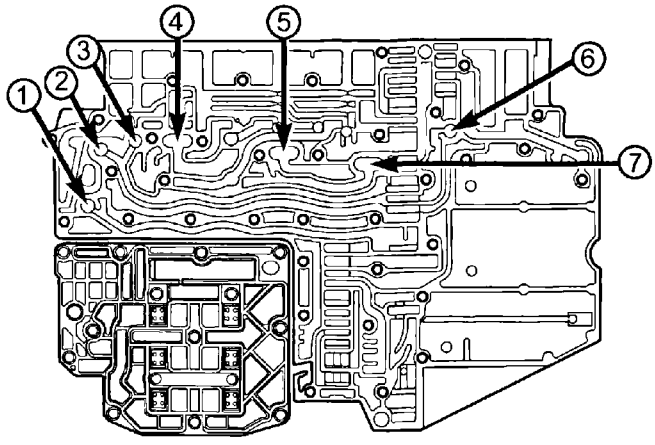

80c072f1

_____ #6 Check Ball

_____ #4 Check Ball

_____ #7 Check Ball

_____ #5 Check Ball

_____ #2 Check Ball

_____ #3 Check Ball

_____ #1 Check Ball

MODULE 3 PLANETARY GEAR TRAIN OPERATION

PLANETARY GEAR TRAIN POWER FLOW - RFE SERIES

The RFE can have either four or five forward speeds (depending on the software) and one reverse ratio. All gear ratios are achieved by applying two clutches. During a shift, one clutch is released and one clutch is applied resulting in different gear ratios.

Notes:

ACTIVITY 3.1 CLUTCH OPERATION RFE SERIES

Using the Service Information, determine which clutches are applied during each of the following gears.

Shift Lever Position	Applied Input Clutch	Driven Planetary Member	Applied Holding Clutch	Held Planetary Member
P-Park			LR+ORC	Input Annulus
R-Reverse	Reverse	Reaction Annulus	LR	Input Annulus
N-Neutral			LR+ORC	Input Annulus
D-Overdrive First	UD	Input Sun Gear	LR+ORC	Input Annulus
Second	UD	Input Sun Gear	2C	Reaction Planetary Carrier
Second Prime	UD	Input Sun Gear	4C	Reaction Annulus
Third	UD+OD	Input Sun Gear/Reverse Carrier		
Fourth	OD	Reverse Carrier	4C	Reaction Annulus
Fifth	OD	Reverse Carrier	2C	Reaction Planetary Carrier
Limp-In-D	UD+OD	Input Sun Gear/Reverse Carrier		
2-First	UD+LR+ORC	Input Sun Gear		Input Annulus
Second	UD+2C	Input Sun Gear		Reaction Annulus
Limp In-Manual 2 Low	UD+2C	Input Sun Gear		Reaction Planetary Carrier

1:1

Instructor-led demonstration on the planetary stack, showing all gear ratios including two-element swap in Second Prime.

ACTIVITY 3.2 GEAR RATIOS RFE SERIES

Using the Service Information, determine which clutches and planetary members are applied during each of the following gears and use the bench unit to perform the gear ratio.

1. Set up the planetary gear set.
2. Mark the input and output elements with a colored paint pen.
3. Rotate the driven planetary member while holding the corresponding held planetary member, and count the number of turns it takes to rotate the output shaft one complete turn of the input member for each gear.
4. Record the number of turns and the gear ratio in the chart below.

Gear	Driven Member and Planetary Member	Held Member and Planetary Member	Turn Input Turns	Turn Output Turns	Gear Ratio
1st				1	
2nd				1	
2nd Prime				1	
3rd				1	
4th				1	
5th				1	
R				1	

5. Do the gear ratios match those in the Service Information?

MODULE 4 HYDRAULIC FLOW

HYDRAULIC FLOW – RFE SERIES

When an RFE transmission is in the Park/Neutral position with the engine running, hydraulic line pressure and torque converter fluid flow are maintained. While the instructor plays the animation, fill in each blank schematic with your pencil or marker. Pay close attention to the way the valves and check balls move.

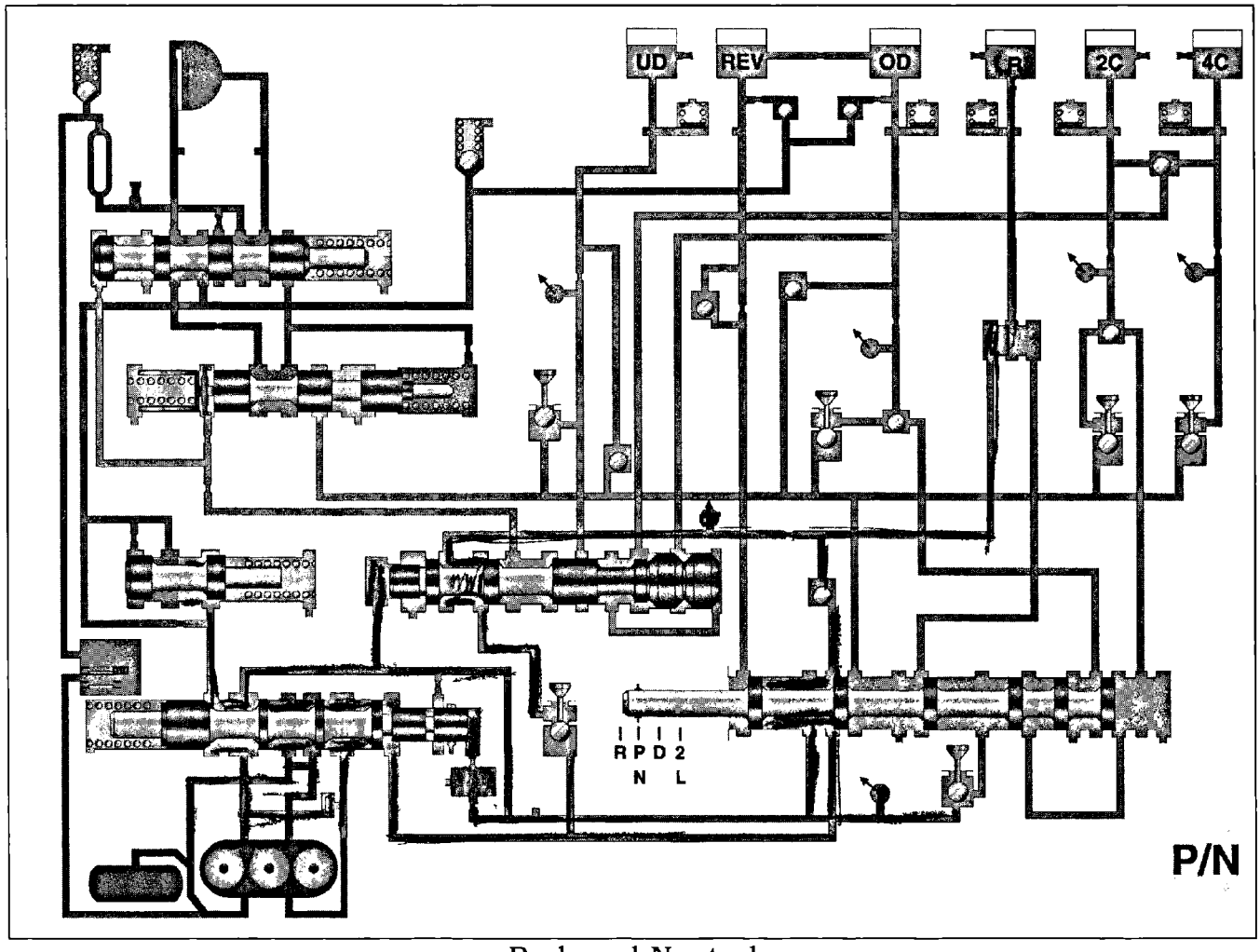

Park and Neutral

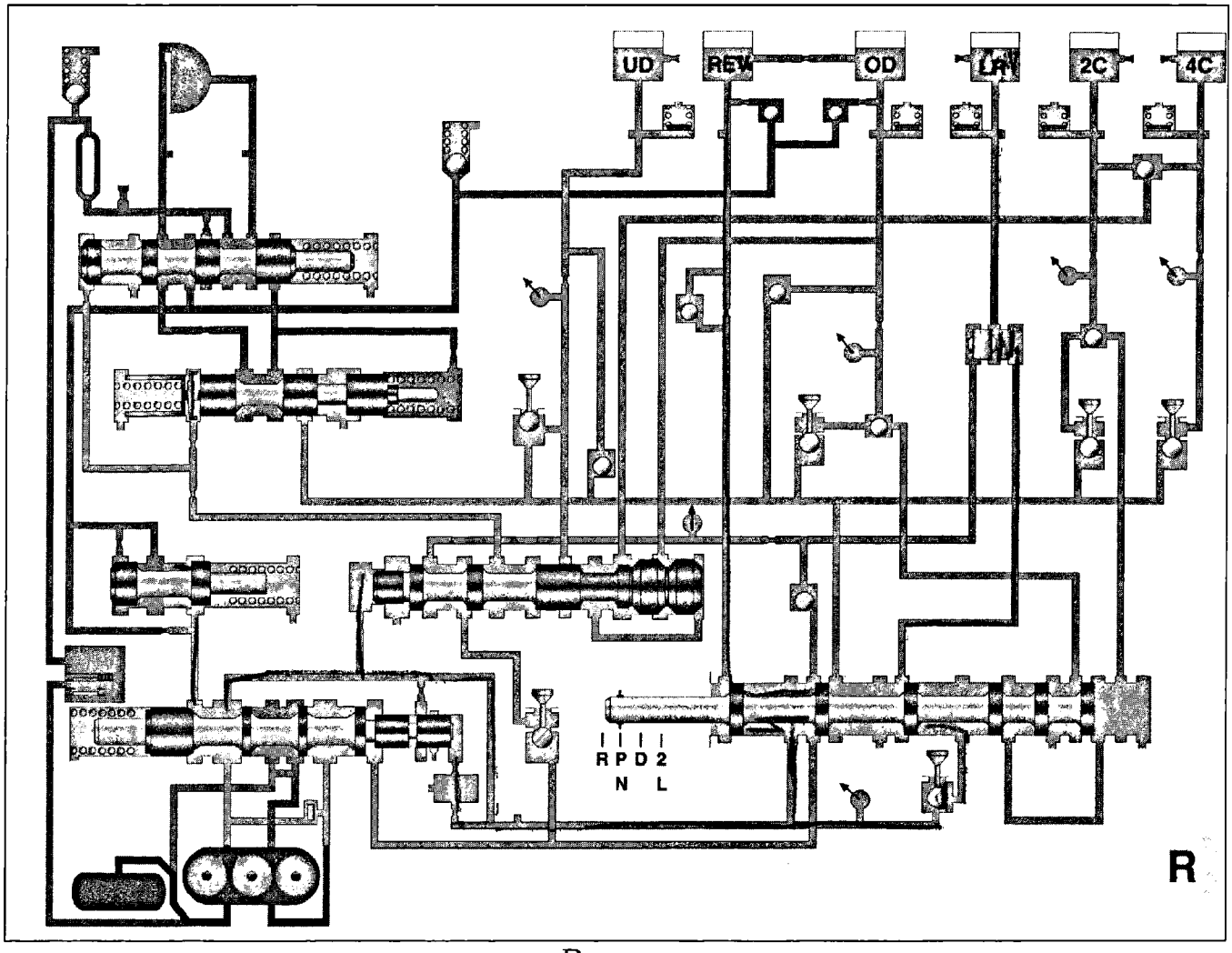

Reverse

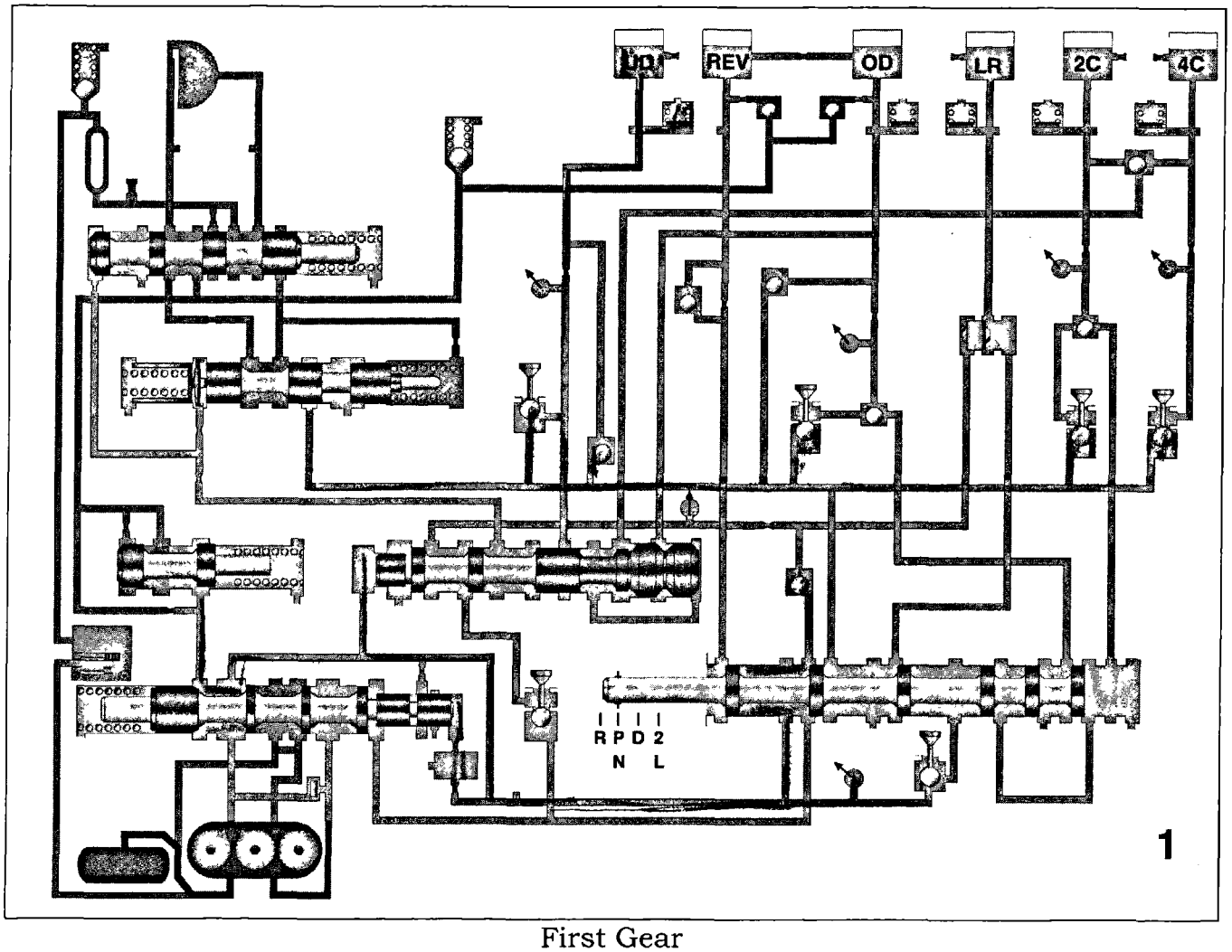

First Gear

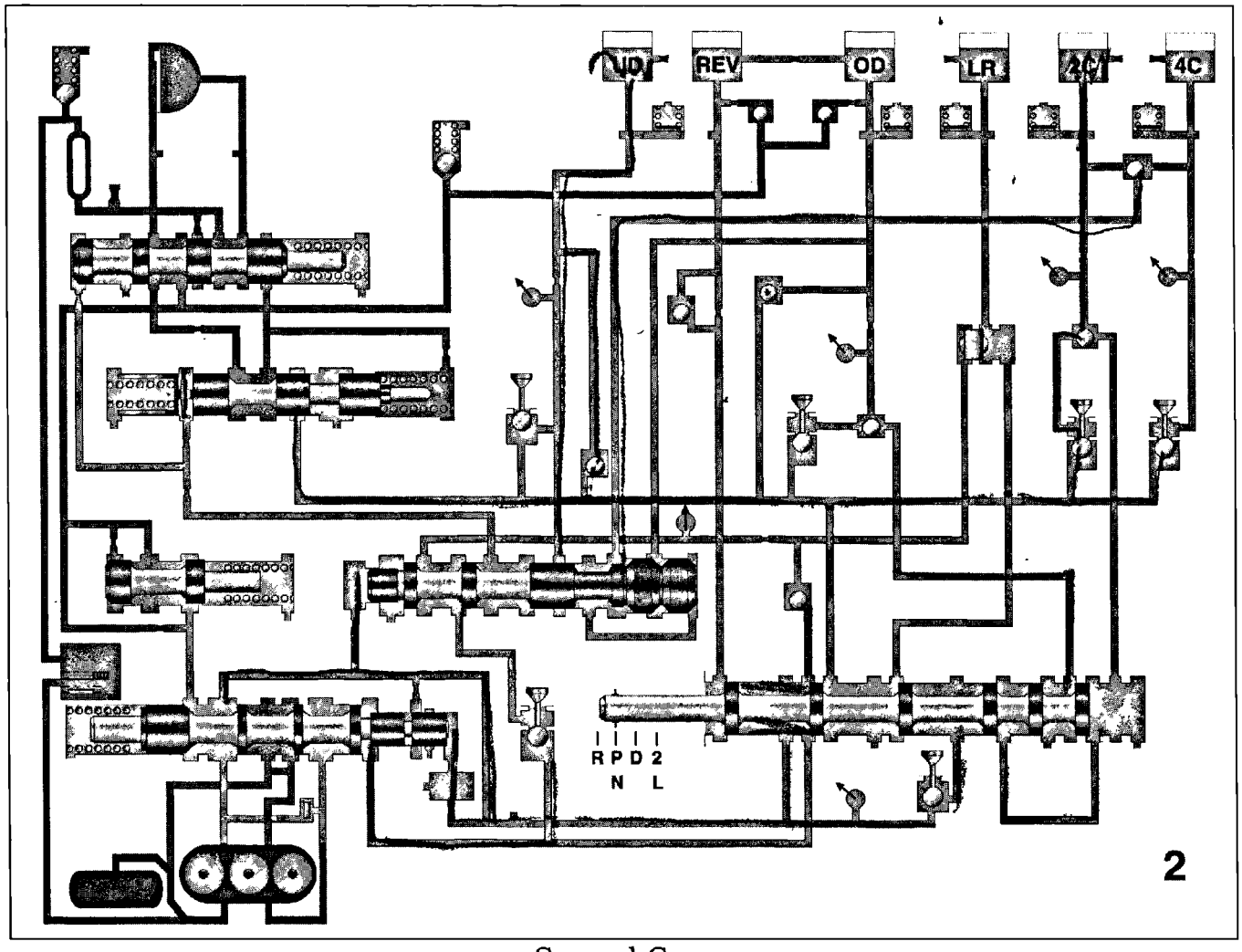

Second Gear

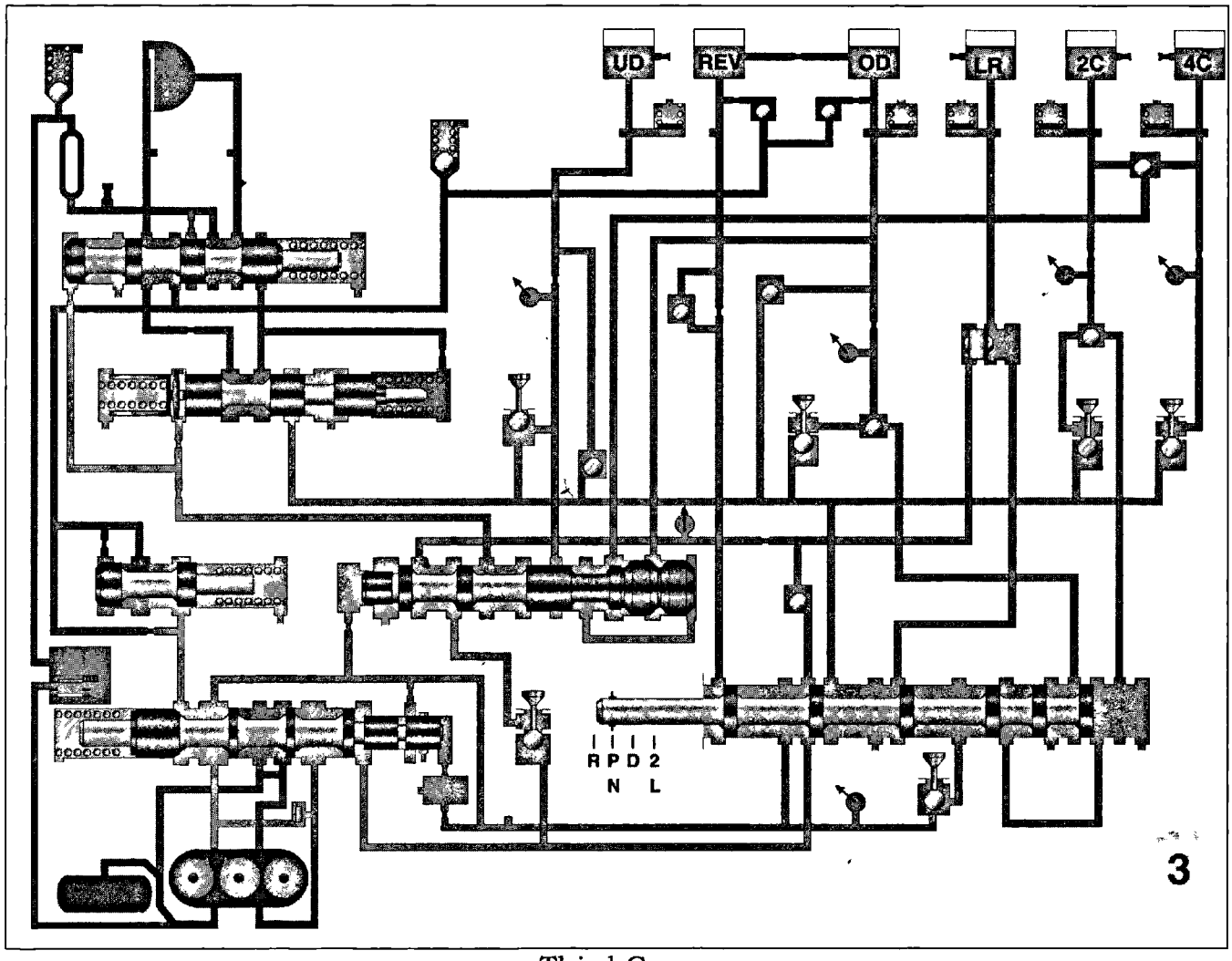

Third Gear

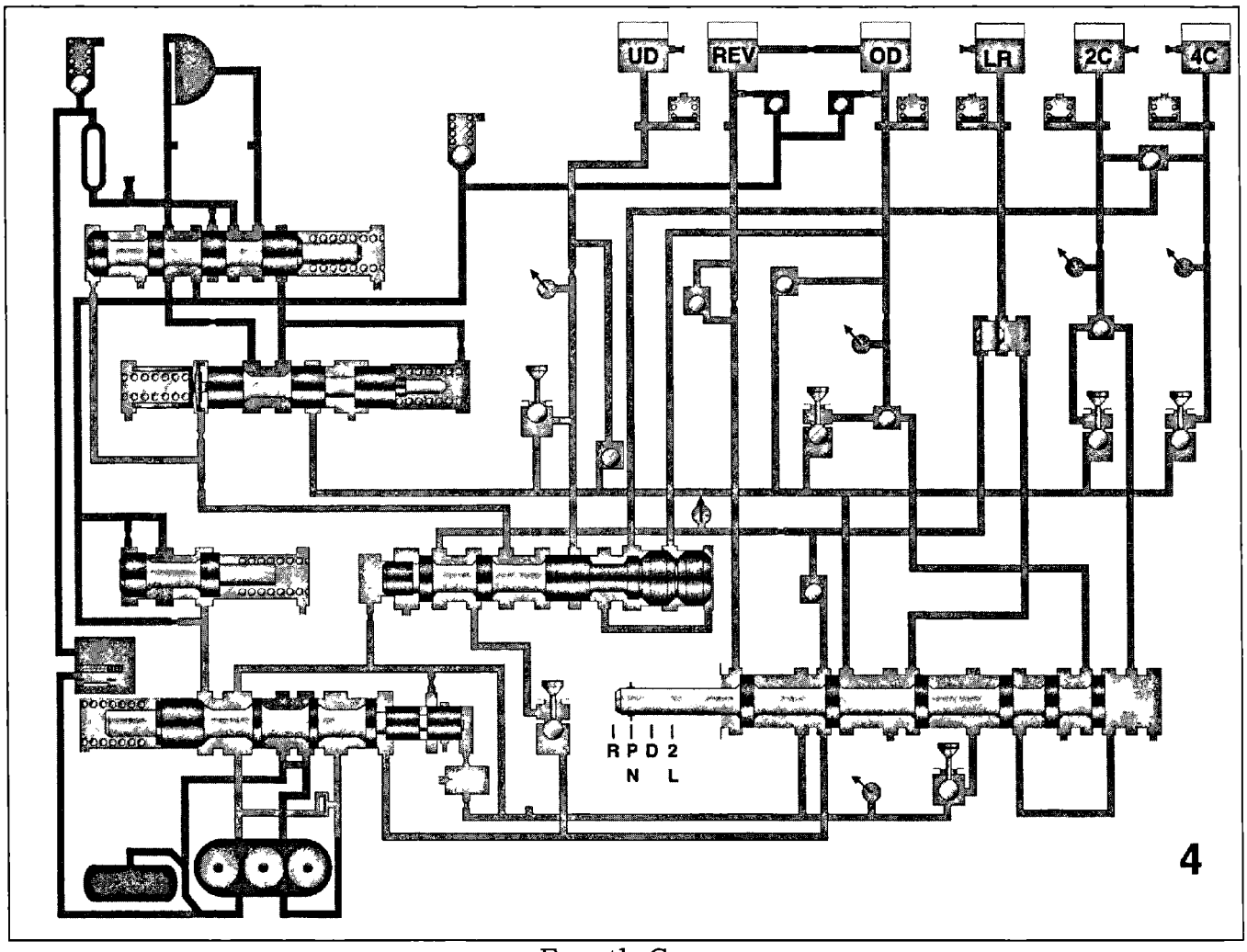

Fourth Gear

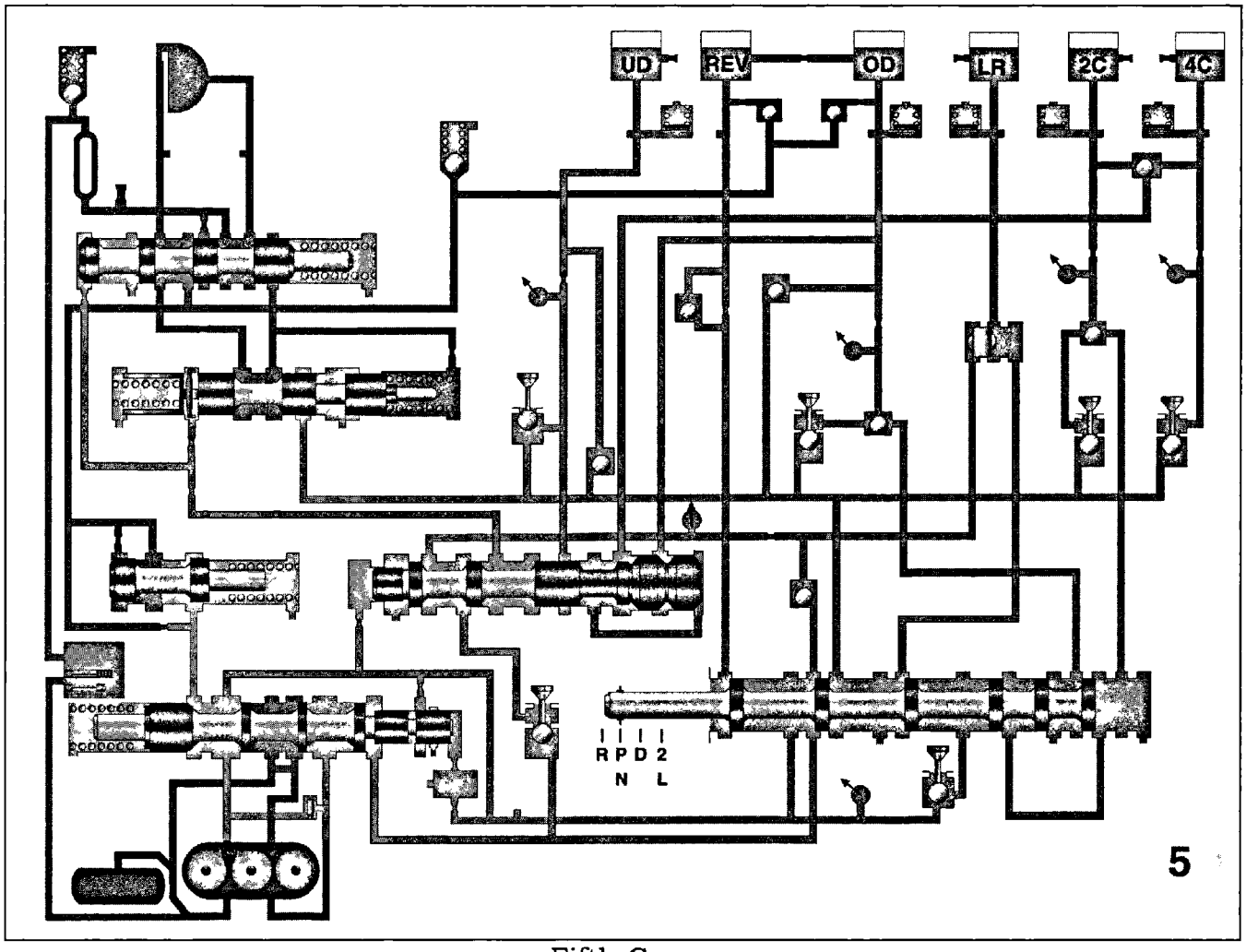

Fifth Gear

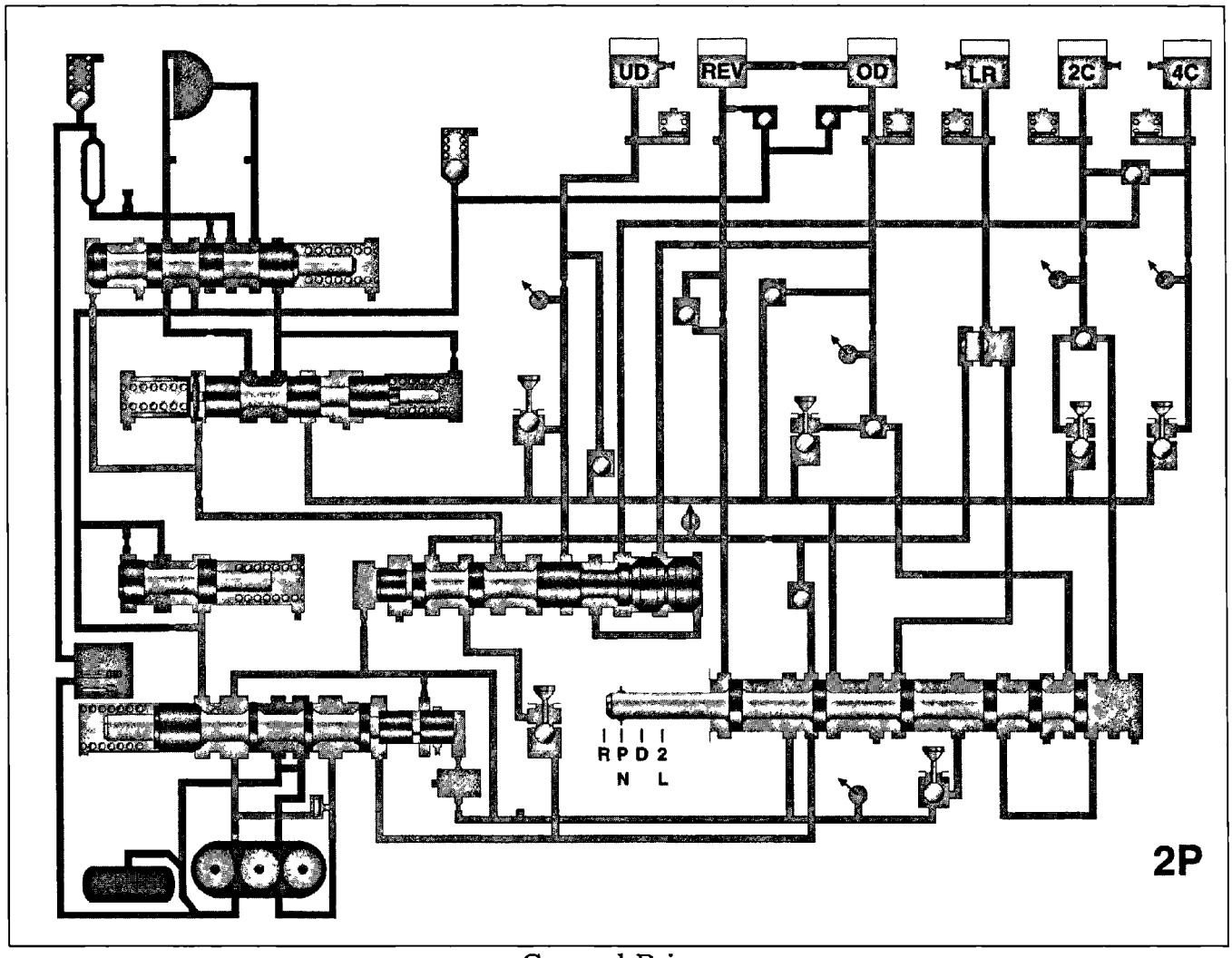

Second Prime

Notes:

TCC OPERATION

During the times the TCC is disengaged, fluid is directed from the regulator valve to the TCC regulator valve, CC control valve, CC switch valve and into the torque converter. This fluid enters the torque converter through a passage inside the input shaft and into the torque converter between the piston and converter cover. This action causes the piston to be moved back and keeps the clutch disengaged. Once the fluid enters the torque converter, the fluid passes through the impeller, turbine and stator and then is routed to the cooler.

Second Gear EMCC Operation

After the transmission is shifted into Second gear and the SSV is shifted into the TCC position by hydraulic pressure from the 2C clutch channel, the LR/CC solenoid can now be used to engaged the TCC. This function is for an overheat condition.

Third and Fourth Gear Lock-up

In Third gear, the SSV is held into the TCC position by hydraulic pressure from the OD clutch channel, the LR/CC solenoid can now be used to engage the TCC. In Fourth gear, the SSV is held in the TCC position by hydraulic pressure from both the OD and 4C clutch channels.

To engage the TCC, the TCM energizes the LR/CC solenoid, allowing oil to flow from the solenoid through the SSV and to the right end of both the CC control valve and CC switch valve. This oil causes both valves to move to the left position. When the valves move to the left position, line pressure from the manual valve passes through both the CC control valve and the CC switch valve into the torque converter on the apply side, and the oil applies pressure on the opposite side of to the TCC piston causing it to move forward and engage the clutch. When the CC switch valve moves left, it also redirects the oil that was flowing into the front side of the torque converter directly to the cooler. This action also vents the front converter passage so the piston can move forward.

ELECTRONICALLY MODULATED CONVERTER CLUTCH (EMCC)

To reduce heat build-up in the transmission and buffer the powertrain against torsional vibrations, the TCM duty cycles the LR/CC solenoid to achieve a smooth application of the torque converter clutch. This function, referred to as electronically modulated converter clutch (EMCC), occurs at various times depending on the following variables:

- Shift lever position
- Current gear range
- Transmission fluid temperature
- Engine coolant temperature
- Input speed
- Throttle angle
- Engine speed

The TCM controls the torque converter by way of internal logic software. The programming of the software provides the TCM with fine control over the LR/CC solenoid. There are three output logic states that can be applied as follows:

- No EMCC
- Partial EMCC
- Full EMCC

EMCC is also necessary to manage cooling system heat load. If EMCC does not function properly, transmission overheating may occur. EMCC oil flow occurs into the unlock side, up to 5 psi, when the converter is fully locked. EMCC provides a 60 rpm slip when the transmission is partially locked.

The following section provides descriptions of each of these operating states.

No EMCC

Under No EMCC conditions, the LR/CC solenoid is OFF. There are several conditions that can result in No EMCC operation. No EMCC can be initiated due to a fault in the transmission or because the TCM does not see the need for EMCC under current driving conditions.

Partial EMCC

Partial EMCC operation modulates the LR/CC solenoid (duty cycle) to obtain partial torque converter clutch application. Partial EMCC operation is maintained until full EMCC is called for and actuated. During partial EMCC some slip does occur. Partial EMCC usually occurs at low speeds, low load and light throttle situations, also at speed above 85 mph.

Full EMCC

During full EMCC operation, the TCM increases the LR/CC solenoid duty cycle to full ON after partial EMCC control brings the engine speed within the desired slip range of "0" by comparing transmission input speed to engine RPM.

Table 1 EMCC Operation

TCM Output Command	Action Taken
No EMCC	Torque converter clutch is OFF.
Partial EMCC	Modulates the LR/CC solenoid (duty cycle) to obtain partial torque converter clutch application. Partial EMCC operation is maintained until full EMCC logic is called for and actuated.
Full EMCC	Increases the LR/CC solenoid duty cycle to full ON after partial EMCC control brings the engine speed within the desired slip ranges of transmission input speed relative to engine RPM (crankshaft speed).

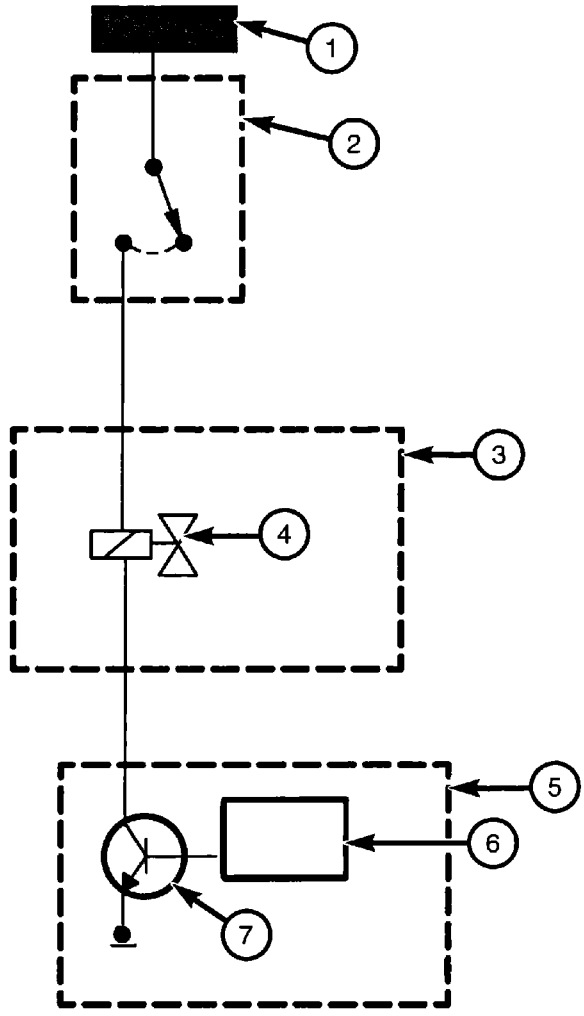

Figure 10 EMCC Circuit

1	Fused B+	5	Transmission Control Module
2	Transmission Control Relay	6	Solid State
3	Solenoid/Pressure Switch Assembly	7	Low/Reverse Solenoid Control
4	LR/CC Solenoid		

Notes:

ACTIVITY 4.1 HYDRAULIC OPERATION - RFE SERIES

Use the Service Information hydraulic schematics to determine the operating gear for the hydraulic path and input clutches and solenoids identified in the following tables. A sample is shown for "P-Park".

Shift Lever Position	Applied Turning Clutch	Applied Holding Clutch	Energized Solenoids	De-energized Solenoids
P-Park	No applied turning clutch	Line pressure thru manual valve, energized LR/CC solenoid, solenoid switching valve, trips L/R pressure switch, moves L/R switch valve, applies L/R clutch	LR/CC - to apply MS – to vent	OD - to vent 2c - to vent 4c - to vent
	Line pressure thru manual valve applies reverse clutch	Line pressure thru manual valve directly to reverse clutch and de-energized MS solenoid, trips L/R pressure switch, moves L/R switch valve, applies L/R clutch		OD - to vent 2c - to vent 4c - to vent MS – to apply LR/CC - to vent
	No applied turning clutch	Line pressure thru manual valve, energized LR/CC solenoid, solenoid switching valve, trips L/R pressure switch, moves L/R switch valve, applies L/R clutch	LR/CC- to apply MS – to vent	OD - to vent 2c - to vent 4c - to vent UD - to vent

ACTIVITY 4.1 HYDRAULIC OPERATION (CONTINUED)

Shift Lever Position	Applied Turning Clutch	Applied Holding Clutch	Energized Solenoids	De-energized Solenoids
	Line pressure thru de-energized UD solenoid trips pressure switch, applies UD clutch	Line pressure thru manual valve, energized LR/CC solenoid, solenoid switching valve, trips L/R pressure switch, moves L/R switch valve, applies L/R clutch	MS - to vent LR - to apply	UD - to apply OD - to vent 2c - to vent 4c - to vent
	Line pressure thru de-energized UD solenoid trips pressure switch, applies UD clutch	At output shaft speeds above 150 rpm, the overrunning clutch is the only holding clutch.	MS - to vent	UD - to apply OD - to vent 2c - to vent 4c - to vent LR/CC – to vent
	Line pressure thru de-energized UD solenoid trips pressure switch, applies UD clutch	Line pressure thru manual valve, energized 2c solenoid, trips 2c pressure switch, applies 2c	MS - to vent 2c - to apply	UD - to apply OD - to vent LR/CC – to vent 4c - to vent
	Line pressure thru de-energized UD solenoid trips pressure switch, applies UD clutch	Line pressure thru manual valve, energized 4c solenoid, trips 4c pressure switch, applies 4c	4c – to apply MS – to vent	UD - to apply OD - to vent LR/CC – to vent 2c – to vent

ACTIVITY 4.1 HYDRAULIC OPERATION (CONTINUED)

Shift Lever Position	Applied Turning Clutch	Applied Holding Clutch	Energized Solenoids	De-energized Solenoids
	Line pressure thru manual valve, de-energized UD and MS solenoids, trips UD and OD pressure switches, applies UD and OD clutches	No applied holding clutch	No energized solenoids	UD – to apply MS – to apply 2c – to vent 4c – to vent LR/CC – to vent OD – to vent
	Line pressure thru manual valve, de-energized MS solenoid, trips OD pressure switch, applies OD clutch	Line pressure thru manual valve, energized 4c solenoid, solenoid switching valve, trips 4c pressure switch, applies 4c	4c – to apply UD - to vent	MS – to apply 2c – to vent LR/CC – to vent OD – to vent
	Line pressure thru manual valve, de-energized UD and MS solenoids, trips UD and OD pressure switches, applies UD and OD clutches	No applied holding clutch	No energized solenoids	UD – to apply MS – to apply 2c – to vent 4c – to vent LR/CC – to vent OD – to vent

ACTIVITY 4.1 HYDRAULIC OPERATION (CONTINUED)

Shift Lever Position	Applied Turning Clutch	Applied Holding Clutch	Energized Solenoids	De-energized Solenoids
	Line pressure thru de-energized UD solenoid trips pressure switch, applies UD clutch	Line pressure thru manual valve, de-energized MS solenoid, trips 2c pressure switch, applies 2c	No energized solenoids	UD – to apply MS – to apply 2c – to vent 4c – to vent LR/CC – to vent OD – to vent
	Line pressure thru de-energized UD solenoid trips pressure switch, applies UD clutch	Line pressure thru manual valve, de-energized MS solenoid, trips 2c pressure switch, applies 2c	No energized solenoids	UD – to apply MS – to apply 2c – to vent 4c – to vent LR/CC – to vent OD – to vent

ACTIVITY 4.1 HYDRAULIC OPERATION (CONTINUED)

Shift Lever Position	Applied Turning Clutch	Applied Holding Clutch	Energized Solenoids	De-energized Solenoids
	Line pressure thru de-energized UD solenoid trips pressure switch, applies UD clutch	Line pressure thru manual valve, energized LR/CC solenoid, solenoid switching valve, trips L/R pressure switch, moves L/R switch valve, applies L/R clutch	MS – to vent LR/CC to apply	UD – to apply 2c – to vent 4c – to vent OD – to vent
			MS – to vent	UD – to apply 2c – to vent 4c – to vent OD – to vent LR/CC – to vent
	Line pressure through the manual valve applies the reverse clutch		MS – to vent	UD – to apply 2c – to vent 4c – to vent OD – to vent LR/CC – to vent

ACTIVITY 4.2 HYDRAULIC DIAGNOSIS

Using the Service Information hydraulic schematics, diagnose the following customer complaints.

1. A technician overhauls a 45RFE and upon road testing the vehicle, the transmission locks up after shifting out of First gear.

_____

_____

_____

2. A vehicle with an RFE transmission does not engage into Reverse or First gear. Pressure testing at the TCC Off port indicates good, immediate pressure build, but when testing pressure at L/R port, the pressure is extremely low. After rebuilding the transmission the same symptoms are present. What are some other areas to be addressed?

_____

_____

_____

_____

4. The customer complains of hard shifts in all gears, both up shifts and down shifts. The DRBIII® shows that code 37 (P1775) "SSV latched in the TCC position" is set. What component has failed?

_____

_____

_____

5. Where is the SSV located?
   a. In the solenoid/pressure switch assembly
   b. In the TCM
   c. In the valve body
   d. In the oil pump

MODULE 5 TRANSMISSION CONTROL MODULE

DaimlerChrysler developed the latest generation of control modules. These control modules operate significantly differently from their predecessors. They provide enhanced shift control capabilities and diagnostic capabilities.

Prior to performing diagnostics, it is imperative to know which controller you are working with. The version and part number for the controller are found using the DRBIII®. This information can be used to help diagnose and verify proper operation of the controller. Information on earlier transmission control modules is found in the appropriate Service Information.

TRANSMISSION CONTROL MODULE

A transmission control module (TCM) is used to control the electronic functions of electronic transmissions. The TCM can be a separate electronic automatic transmission (EATX) control module, or it can be combined with the powertrain control module (PCM) in the Next Generation Controller (NGC). The NGC controls operation in exactly the same manner so there should be a seamless change between the NGC and EATX.

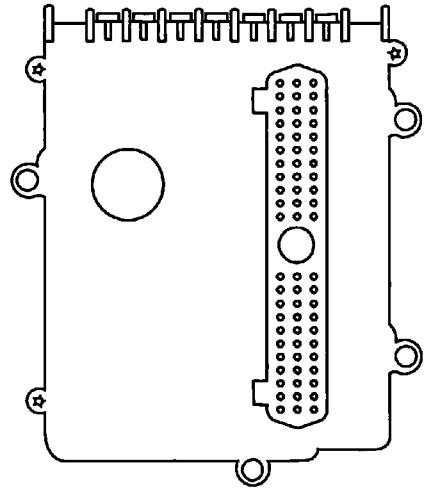

Figure 11 EATX (TCM)

The TCM is responsible for controlling all electronic operations of the transmission. Information received from both direct and indirect inputs to the TCM determines the operational mode of the transmission. Direct inputs are hardwired to the TCM and indirect inputs originate from other related components and modules. The indirect information is shared with the TCM through the vehicle communication bus. The TCM uses a single 60-pin connector.

The NGC uses four different connectors. Each individual connector contains 38 pins. The majority of the transmission circuits are located in connector C4.

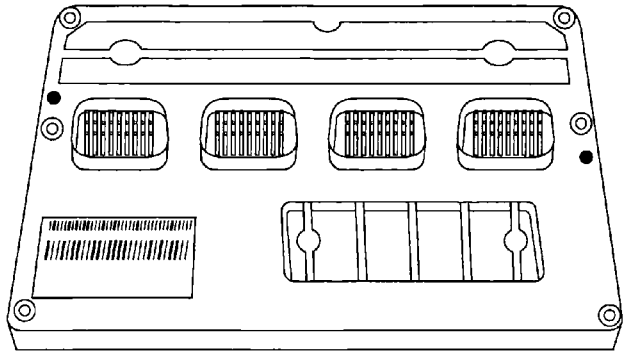

Figure 12 Next Generation Control Module (NGC)

When diagnosing transmission electrical problems, always refer to the wiring diagram information in the appropriate Service Information for pin-out identification and location.

Note: Do not back probe an NGC controller. Use special tool #8815.

When the ignition switch is in the start, run or off positions, voltage is sent through two fuses located in the junction block before reaching the TCM. The TCM internal circuitry is activated when the ignition switch is rolled from the lock position to the off position, and remains active in the off and run positions. Direct battery feed is needed for the TCM memory function and the "keep alive" memory function. To ensure all internal circuits are working properly, the TCM performs a self-test as soon as the ignition is switched to the ON position. The TCM then sends battery voltage to the transmission control relay (TCR). From the relay, battery voltage is present at the TCM and supplied to the solenoid/pressure switch assembly. If limp-in mode is requested, the TCM responds by not sending battery voltage to the TCR. In some vehicles the TCM is deactivated when in the start position. When using the transmission simulator tool, the simulator "back feeds" the starter relay circuit with 12 volts to prevent the engine from starting. The starter relay must be removed when using the simulator or the TCM does not respond.

Based on information from the various inputs, the TCM determines the appropriate shift schedule and shift points depending on transmission operating conditions and driver demand. The TCM also stores clutch volume index information, system self-diagnostics and diagnostic capabilities when monitored with the DRBIII® scan tool.

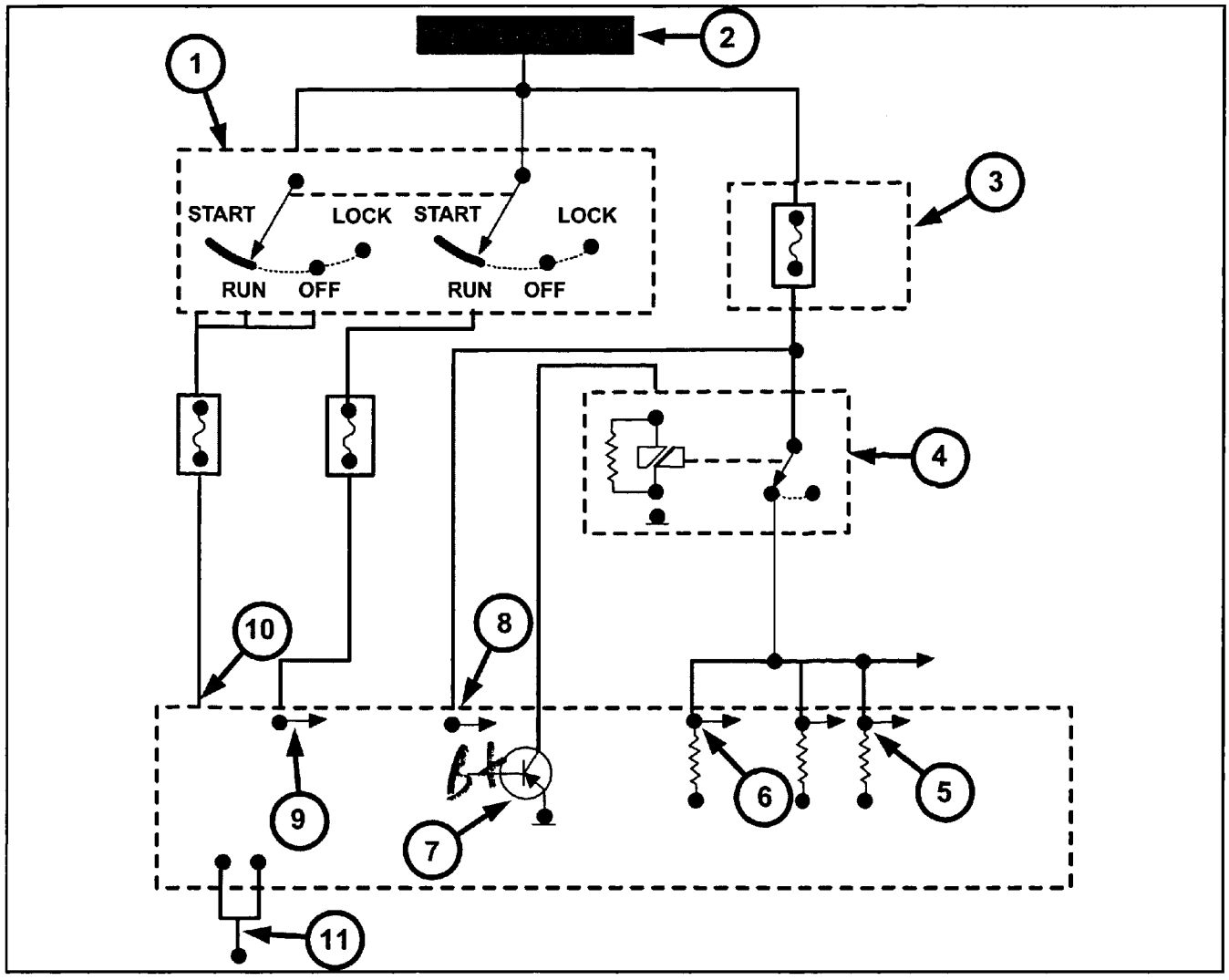

Figure 13 Battery and Ignition Input Circuit

1	Ignition Switch	7	Transmission Relay Control (12V)
2	Direct Battery	8	Fused B+
3	PDC or IPM	9	Fused Ignition Switch Output (Start)
4	Transmission Control Relay	10	Fused Ignition Switch Output (Off, Run, Start)
5	Transmission Control Relay Output	11	Ground
6	Transmission Control Relay Output		

Quick Learn

The Quick Learn procedure is performed with the DRBIII® scan tool and allows the electronic transmission to recalibrate itself. The Quick Learn procedure should be performed if any of the following procedures are performed:

- Replacement of the transmission, TCM, valve body, clutch plate and/or seal
- Valve body recondition

All learned parameters are set to a default value after a Quick Learn. Poor shift quality may be experienced when operating the vehicle immediately following a Quick Learn since other learned parameters may need to be drive learned. Because of this, CVIs must be updated after performing a Quick Learn. The Drive Learn procedure should be done after performing a Quick Learn. This is done by driving the vehicle through all of its gear ranges until the TCM can update all parameters. After performing the road test, CVIs should be read with the DRBIII® scan tool to verify the updated values are within specification.

Drive Learn (RFE only)

Drive learn is a procedure for the TCM to learn CVIs. This procedure is repeated until CVIs for that particular clutch or set of clutches stabilize (stop moving in one direction). The current procedure is found in the latest Service Information.

Notes:

ACTIVITY 5.1 TCM ON-VEHICLE IDENTIFICATION

For this activity, use the DRBIII® scan tool in conjunction with the Service Information to identify the version of the TCM on the classroom vehicles.

For your reference write down the vehicle used for this activity in the space provided below:

Year: _____ **Model:** _____ **Transmission:** _____

1. Locate the TCM on the classroom vehicle. Where is it located?_____

   _____

   Turn the ignition switch to RUN. At the "Select System" menu, select "Transmission". The DRBIII® then performs a Communication Bus Test.

2. Access the "Select Function" menu and select "Module Display". Fill in the blank spaces below once the module display appears:

   Controller model year: _____

   Version level: _____

   Engine model: _____

   TCM part #: _____

3. Exit the "Module Display" and turn the ignition to OFF. Leave the DRBIII® connected to the DLC. Go to the next vehicle.

4. Why is it important to know the part number of the TCM when diagnosing a vehicle?

   _____

ACTIVITY 5.2 FLASH PROGRAMMING

For this activity, the instructor performs a demonstration of flash procedures. Use the space below to take any notes you feel are necessary or valuable.

Notes: _____

_____

_____

_____

_____

_____

_____

1. After performing a flash procedure on an original controller, you must perform a Quick Learn.

   True False

2. After performing a flash update, what labels do you need to complete?_____

   _____

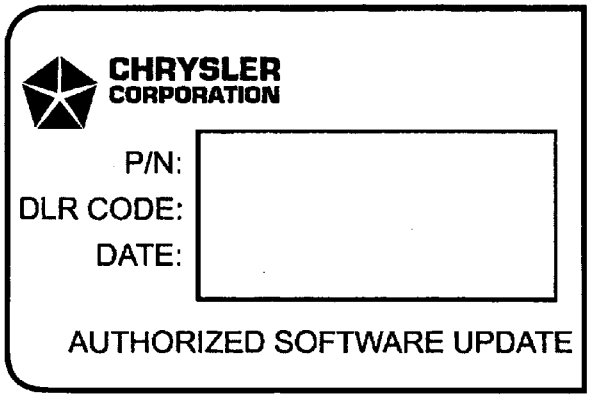

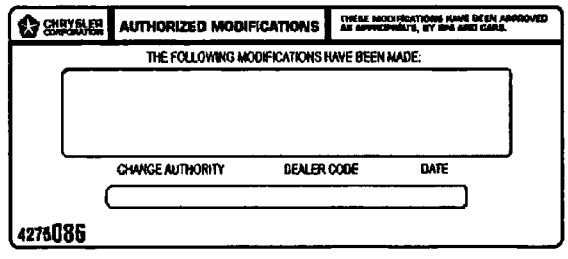

Note: Do not let a power loss occur during a flash. This could cause the loss of all TCM information.

Notes:

CLUTCH VOLUME INDEXES

An important function of the TCM is to monitor clutch volume indexes (CVIs). CVI is the measurement of the physical amount of fluid required to fill the clutch and stroke the piston. CVIs in general are updated when a clutch is applied. The TCM monitors gear ratio changes by monitoring input and output speed sensors.

Typical gear ratios are as follows:

	RFE Series
• **1st gear =**	3.00:1
• **2nd gear =**	1.67:1
• **2nd Prime gear**	1.50:1
• **3rd gear =**	1.00:1
• **4th gear =**	0.75:1
• **5th gear =**	0.667:1

Gear ratios are determined by using the DRBIII® scan tool and reading the input/output speed sensor values in the "Monitors" display. For example, if the input speed sensor reading says 900 rpm and the output speed sensor says 300 rpm, then it can be determined the gear ratio is about 3:1. You will view this later in an upcoming activity. By comparing the two inputs, the TCM determines which gear the transmission is in. The TCM determines CVIs by monitoring how long it takes for a completed gear change to occur.

One CVI count is equal to 1/64 of a cubic inch of transmission fluid.

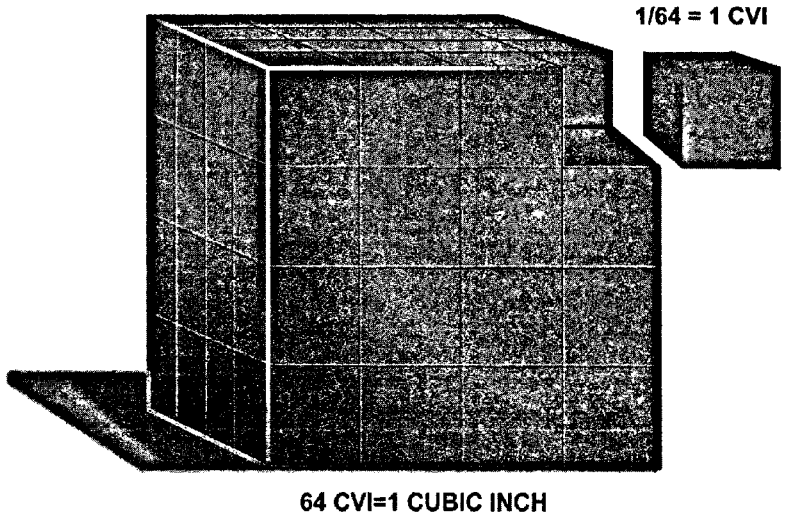

Figure 14 Cubic Inch CVI

CVI is the measurement of the physical amount of fluid required to fill the clutch and stroke the piston. CVIs are, in general, updated when a clutch is applied. Refer to the appropriate Service Information for a detailed description of the conditions necessary to drive learn each clutch's CVI.

Up shifts are performed by timing the venting of the releasing clutch to the filling of the applying clutch. The releasing clutch must lose its holding capacity at the same time the applying clutch gains holding capacity. Proper CVI values are critical to properly perform up shifts. If the applying clutch's CVI is too low the engine may flare and cause the releasing clutch to momentarily re-apply causing a single or multiple bump. This causes the CVIs to learn up. If the applying clutch's CVI is too high the clutches can overlap, creating a momentary braking sensation and causing the CVIs to learn down.

Down shifts are performed by slipping the releasing element and allowing the engine speed to increase at a controlled rate to its new target value, then engaging the applying element.

Each accumulator has the capacity of 1 cubic inch of fluid (64 CVIs). This accumulator value is accounted for by the TCM.

For example, to apply a clutch it requires one cubic inch or 64 CVIs. The accumulator value of 64 CVIs and the applied clutch value of 64 CVIs is equal to 128 CVIs or 2 cubic inches of fluid. The CVI value as read with the DRBIII® only displays the clutch volume, not the accumulator volume. Given that the accumulator value is not accounted for by the TCM the read value only accounts for the amount of fluid to apply a clutch (in this example 64 CVIs).

If an accumulator spring were to break suddenly, shift quality may be rough until the CVIs adjust. When looking at the CVI value it gradually decrements to a very low value and may not look as if there is a problem. Over several shifts the transmission CVI value progressively decrements until it reaches a value that is out of range. Quick Learn CVI values are range limited and cannot be used to diagnose this problem.

The volumes of transmission fluid needed to apply the friction elements are continuously monitored and learned for the adaptive controls. As friction elements wear, it takes more fluid volume to apply the element. Refer to Table 2 for typical CVI values.

Certain mechanical problems, such as broken snap rings, cause near zero (or incorrect) learned fill volumes. Incorrect fill volumes result in setting the appropriate DTC. Internal transmission failures are the most likely cause for these.

Note: During limp-in mode, CVIs are not monitored or updated.

Table 2 Clutch Volumes RFE Series

Clutch	When Updated	Oil Temperature	Proper Clutch Volume
L/R	2-1 or 3-1 manual down shift	> 110° F	82 to 134
2C	3-2 kick down shift	> 110° F	25 to 64
OD	2-3 up shift	> 110° F	30 to 64
4C	3-4 up shift	> 110° F	30 to 64
UD	4-3 part throttle kick down	> 110° F	25 to 92
Alt. 2C	4-5 up shift	> 110° F	Greater than 2C
1st N-1 UD	10 minutes after engine off	> 80° F	Greater than UD
Normal N-1 UD		> 80° F	Equal to UD
1st 2-3 OD	After first 2-3 shift	>65° F	Higher than OD

ACTIVITY 5.3 CLUTCH VOLUME INDEXES

For this activity use the DRBIII® scan tool to observe CVIs and how they are updated.

For your reference write down the vehicle used for this activity in the space provided below:

Year: 2005 **Model**: LTI TAXI

Transmission: 5 RFE

1. Go to the classroom vehicle, hook up the DRBIII®, and establish communication.
2. Go into "Standalone" and then "2001 Diagnostics".
3. Select "Transmission".
4. Look up the CVIs. CVIs are found in two places, "Sensors", and "Monitors". Go into "Sensors" and locate the CVI values.
5. Go into "Monitors" and locate the CVI values. This screen is recommended for viewing CVIs because the "Sensors" screen has a lot of other information.
6. Record the CVI values in the chart provided below:

Clutch	**Clutch Volume**		
	Before Quick Learn	After Quick Learn	After Drive Learn Procedure
L/R	99	81	
2C	44	39	
OD	53	45	
UD	54	45	
4C	38	32	
1st 2-3 OD	63	54	
1st N-1 UD	91	89	
Alt. 2C	42	51	
Norm N-1 UD	45	45	

7. Do the values recorded in step 6 fall within the specifications provided in Service Information?

   Yes No

ACTIVITY 5.3 CLUTCH VOLUME INDEXES (CONTINUED)

8. Start the vehicle.
9. Under which DRBIII® screen do you find the Quick Learn procedure?

   _____

10. Perform a Quick Learn by following the steps on the DRBIII®.
11. Go back and observe the CVI values. Record them in the chart above.
12. Compare the readings with the ones before performing a Quick Learn to see if any have changed.
13. Shut down the vehicle and exit the DRBIII®. You are finished with this activity.

DRIVE LEARN JOB AID

	Start Value	Finish Value
Learn 1st Neutral to Drive Shift.		
1st ND UD CVI	_____	_____
Trans Temperature Required	_____	
Learn Neutral to Drive Garage Shift		
N-1 UD CVI	_____	_____
Trans Temperature Required	_____	
Learn 1st 2-3 Shift After Restart or Shift into Reverse		
2-3 OD CVI	_____	_____
Trans Temperature Required	_____	
Throttle Angle	_____	
Learn 2-3 and 3-4 Up Shift		
OD CVI	_____	_____
Trans Temperature Required	_____	
Learn 4-3 Coastdown and Part Throttle Kickdown		
UD CVI	_____	_____
Trans Temperature Required	_____	
Learn 1-2 Up Shift and 3-2 Kickdown		
2C CVI	_____	_____
Trans Temperature Required	_____	
Learn Manual 2-1 Pulldown and Neutral to Reverse Shift		
LR CVI	_____	_____
Trans Temperature Required	_____	
Learn Neutral to Reverse Shift		
LR CVI	_____	_____
Trans Temperature Required	_____	
Learn 4-5 Up Shift		
2C Alt CVI	_____	_____
Trans Temperature Required	_____	
Throttle Angle	_____	

TCM Normal Shutdown Routine

When the ignition switch is turned OFF, the TCM goes through a specific shutdown routine. This includes copying all transmission-learned values into the EEPROM in case of a battery disconnect. Non-volatile memory is where learned values are stored. If the TCM is disconnected from the battery, this memory is lost. Values such as clutch apply rates, clutch release rates and CVIs are stored in non-volatile memory. If the TCM is disconnected from direct battery voltage, these stored transmission learned values are substituted for the erased learned values when the CPU is reinitialized.

TCM Orderly Shutdown Routine

An orderly shutdown routine is activated with certain faults prior to opening the transmission control relay (limp-in). The result of an orderly shutdown is dependent on the operating condition at the time of the fault. If the transmission is in Park, Reverse, Neutral or Second Gear (Third Gear - RFE only), there is no additional action needed by the TCM. The transmission control relay is opened immediately because the power off state of the transmission has already been achieved.

If the transmission is in Fourth or Fifth gear for the RFE series, then the current gear range is maintained to prevent the possibility of causing high engine RPM and/or engine braking. Certain faults, such as a solenoid continuity fault, place the transmission into Neutral to allow the vehicle to slow to a safe speed before placing it into limp-in.

The actual shutdown sequence reduces the possibility of engine flare-up or clutch overlap (three clutches applied) as the transmission defaults to Second or Third gear. This is accomplished by releasing the non-second gear clutches slightly before the transmission control relay is opened. At greater throttle angles, the transmission control relay is immediately opened because Second or Third gear clutches typically apply faster than the non-second gear clutches. The purpose is to prevent too many clutches from being applied at the same time during moderate throttle angles, and to prevent engine flare at higher throttle openings.

Immediate Shutdown

To cause an immediate shutdown, all solenoids are turned off at the same time. To cause an immediate shutdown, the transmission control relay is opened at the time of the fault. Default to Second or Third gear takes place. An immediate shutdown may result in clutch overlap at low to moderate throttle angles and a temporary engine flare with heavier throttle angles. An engine braking condition may also result at high vehicle speeds.

At the end of either the orderly shutdown or immediate shutdown routine, the fault condition is recorded in memory.

MODULE 6 ELECTRONIC INPUTS AND OUTPUTS

The TCM relies on inputs from various switches and sensors to provide the proper output signals to the transmission. Some inputs to the TCM are direct, or hardwired, inputs. The remaining indirect inputs are bus messages that are shared (broadcast) between other control modules. It is important to understand the functional differences between direct and indirect inputs.

DIRECT INPUTS

A direct input is any input that is hardwired to the TCM. The TCM receives several different inputs that assist the TCM in controlling the electronic transmissions. The TCM constantly monitors the operating conditions of the transmission and is capable of detecting abnormalities.

The following switches/sensors are direct inputs to the TCM and are covered in this section:

- Power and ground
- Ignition ON voltage
- Transmission control relay (switched battery)
- Transmission range sensor (TRS)
- Pressure switches
- Transmission temperature sensor
- Throttle position sensor (TPS)
- Crankshaft position sensor (CKP)
- Input shaft speed sensor
- Output shaft speed sensor
- Overdrive switch
- Line pressure sensor
- PCI bus

Power and Ground

Power and ground are needed at all times for the TCM to function. Direct battery voltage is supplied to the following:

- Ignition switch
- Transmission control relay (switch contact side)
- Fused B+ pin at the TCM

For the TCM to function, battery voltage and ground are needed at all times. Direct battery voltage is supplied to the ignition switch, and the direct battery pin at the TCM. If power or ground is lost to the TCM, the transmission solenoids revert to a power off state causing the transmission to enter limp-in mode.

Ignition input to the TCM provides the "wake up" signal to activate the TCM's internal circuitry. The fused B+ feed is used for TCM memory functions. The "keep alive" memory function enables the TCM to store and retain CVIs.

When the ignition switch is turned to the RUN or START position, fused battery voltage is applied at the fused ignition input pin. Initially the TCM checks for proper voltage. Any voltage above approximately 26 volts or below approximately 8 volts may shut down the TCM. The TCM has over and under voltage protection.

If the vehicle loses power or ground to the TCM, the solenoids go to their respective power-off states. Some solenoids are normally applied and others are normally vented. The transmission is designed to go into Second or Third depending on gear selector position, gear mode (limp-in), since there is no power available to control the transmission solenoids. However, if power is restored, the TCM powers-up and normal operation is restored. A DTC may be set if there is vehicle speed.

The TCM provides protection for the transmission by controlling the transmission control relay. If a problem occurs that is likely to result in transmission damage, the TCM de-energizes the transmission control relay. This action removes voltage from the solenoids and pressure switches, resulting in a limp-in condition.

The ignition circuit sense (ICS) input is used to signal the TCM that the ignition switch has energized the ignition circuit. Battery voltage is also supplied to the PCM through the ignition switch when the ignition switch is in the RUN or START position. The ICS is considered a "wake-up" signal to the TCM.

Related DTCs

The following DTCs are directly related to battery and ignition input circuits:

- DTC 8 "No Response"
- DTC 12 (P1684) "Battery Disconnected"
- DTC 14 (P0891) "Relay Output Always On"
- DTC 15 (P0888) "Relay Output Always Off"
- DTC 76 (P0884) "Power-Up at Speed"

Transmission Control Relay

The transmission control relay supplies power to the solenoids and the pressure switches. When the TCM receives fused ignition input, the TCM energizes the relay by supplying 12 volts to the coil side of the relay. The relay output is then fed back to the TCM. The 12-volt input from the relay is referred to as switched battery. The relay is also used by the TCM to put the transmission in limp-in mode. If the TCM detects a limp-in condition, the TCM de-energizes the relay so voltage is no longer available to the transmission solenoids or switches.

Prior to energizing the relay, the TCM verifies the relay contacts are open by checking for 0 voltage at the switched battery terminals. After the relay is energized, the TCM constantly monitors the switched battery terminals for voltage.

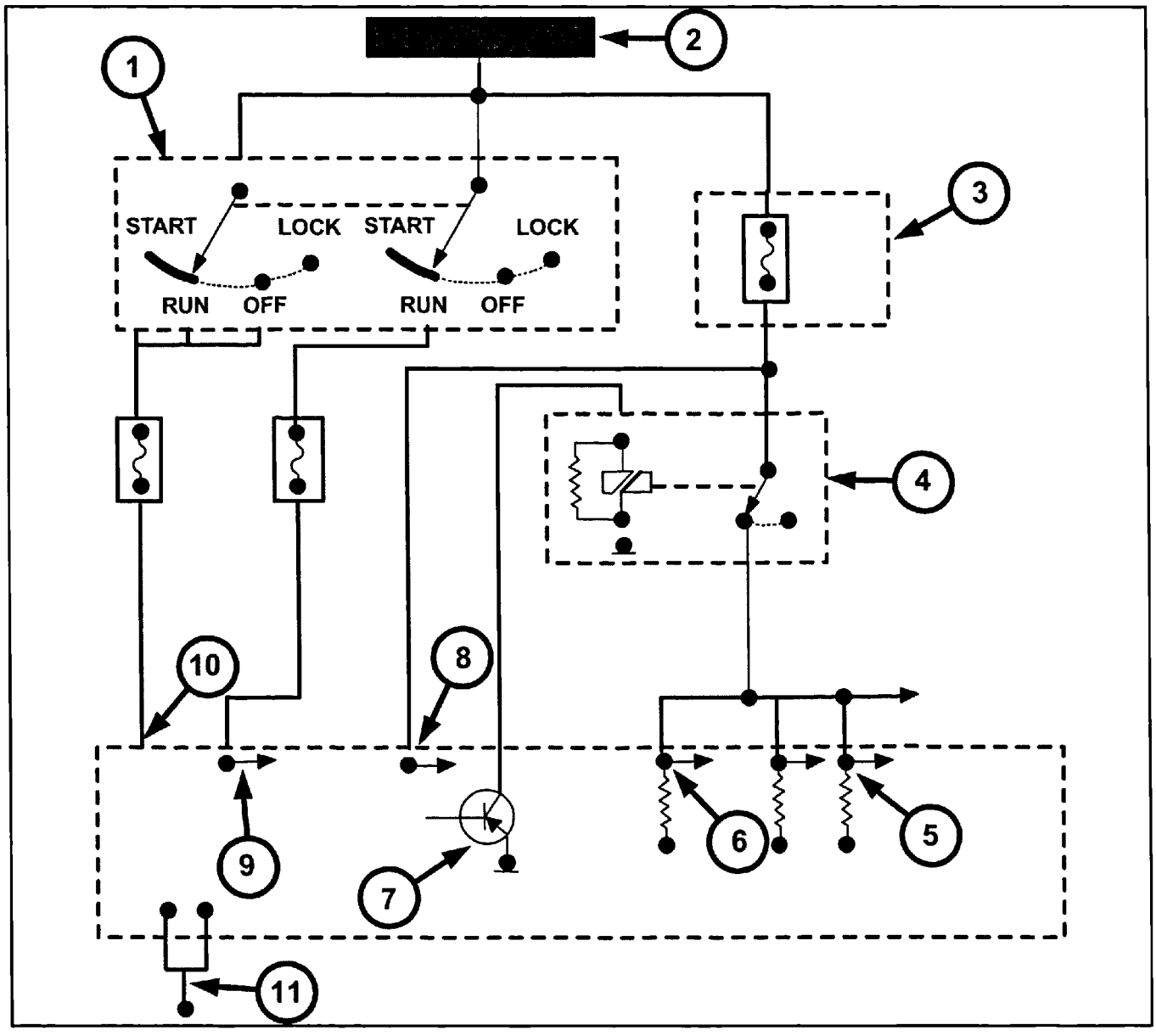

Figure 15 Battery and Ignition Input Circuit

1	Ignition Switch	7	Transmission Relay Control (12V)
2	Direct Battery	8	Fused B+
3	PDC or IPM	9	Fused Ignition Switch Output (Start)
4	Transmission Control Relay	10	Fused Ignition Switch Output (Off, Run, Start)
5	Transmission Control Relay Output	11	Ground
6	Transmission Control Relay Output		

ACTIVITY 6.1 TCM POWER SUPPLY INPUT ANALYSIS

For this activity, complete the following sheet by performing the steps on the classroom vehicles.

Go to the classroom vehicle and establish communication with the DRBIII®.

1. Disconnect the transmission control relay. Refer to the Service Information for relay and connector locations, if necessary.
2. With the DRBIII®, read the "Switched Battery Voltage". Choose "Transmission" then "Sensors".
3. What is the switched battery voltage?

   _____

4. Reconnect the relay and with the DRBIII®, and read the "Switched Battery Voltage".
5. What is the measured voltage?

   _____

6. This circuit supplies voltage to which components?

   _____

7. Which of the following best describes the effect of removing the transmission control relay? (There may be more than one correct answer.)
   a. The vehicle does not move without the relay.
   b. The transmission moves in Third gear and Reverse without the relay.
   c. The transmission operates in First gear during limp-in.
   d. The TCM does not power-up.
8. What happens to transmission operation if you lose the connection at pin 8? ___

   _____

9. What happens to transmission operation if you lose the connection at pin 11? _

   _____

Notes:

Notes:

Transmission Range Sensor (TRS)

The transmission range sensor (TRS) senses the electrical state (grounded or ungrounded) of multiple pins that ride on a code plate in the transmission. The RFE has five TRS pins. The TRS contains five switches and a back-up lamp switch is included. There are unique switch states in each shift lever position and also transition zones (with their own unique pin states) between gear selector positions.

The TCM sends 12 volts to each of the TRS switches inside the TRS. Each switch can either be opened or closed, depending on the manual valve position. Whenever a switch closes, the associated 12-volt sense circuit at the TCM senses low voltage. Each manual valve position has a unique combination of closed and open switches and is referred to as the PRNDL code. Since there are five switches, there are also many different combinations of open and closed switches, or possible codes. Performing a shift lever position test verifies proper operation of the transmission range sensor. Input codes are screened from the transmission range sensor (TRS) sense switches while at the same time the shift lever position (SLP) logic provides an output signal to control actual gear selection.

The purpose of the transmission range sensor (TRS) is to provide the TCM with current gear position data and transmission fluid temperature data. In addition, the TRS completes neutral safety and back-up lamp functions. The TCM interprets this information and determines the appropriate transmission gear position and shift schedule.

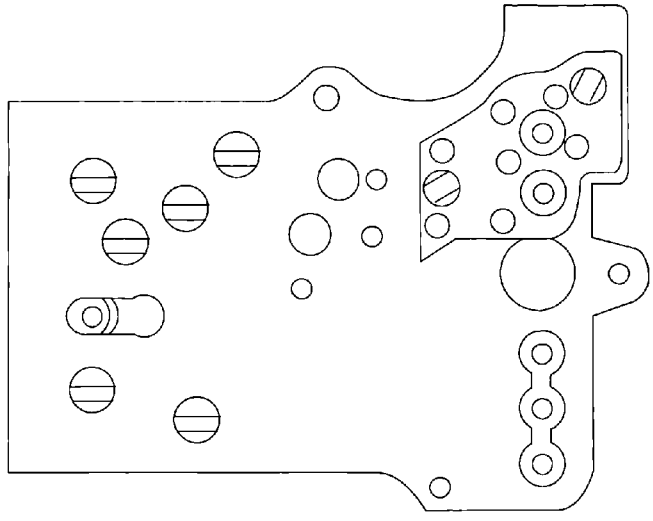

Figure 16 Transmission Range Sensor

The TCM monitors a voltage drop on the five pins of the TRS. Voltage drop through the TRS is dependent on the driver's placement of the gear selector. When one of the switches closes, the associated 12-volt sense circuit at the TCM goes low. For example, when the gear selection is Park, the first three switches are closed and the TCM measures low voltage on the sense pins. For more information, refer to the chart in the Service Information.

The TCM uses these switch inputs to assist in determining shift schedules and proper clutch application.

Since there are five switches, there are thirty-two possible combinations of open and closed switch (codes). Twelve combinations are related to gear position and five are used for between gear positions. The remainder of the codes should never occur. If an invalid code is detected, the TCM tries to determine the shift lever position through hydraulic interpretation by way of the pressure switches and shift solenoids. This is done by momentarily energizing select solenoids and monitoring the pressure switch responses.

Note: It is very important to verify the correctness of the shift lever position signals before reading the diagnostic trouble codes. This ensures unnecessary diagnostics are not performed. Another reason is a fault in the shift lever position circuit may set other DTCs that are, actually, not the cause of the problem.

The back-up lamp switch closes whenever the gear selector is in Reverse. When this switch closes, a path to ground is provided through the right and left back-up lamps, causing the lamps to illuminate.

If the transmission temperature sensor part of the TRS fails, the TCM defaults to fluid temperature, which is calculated from a combination of other inputs such as battery temperature sensor, engine coolant temperature sensor and in-gear run time.

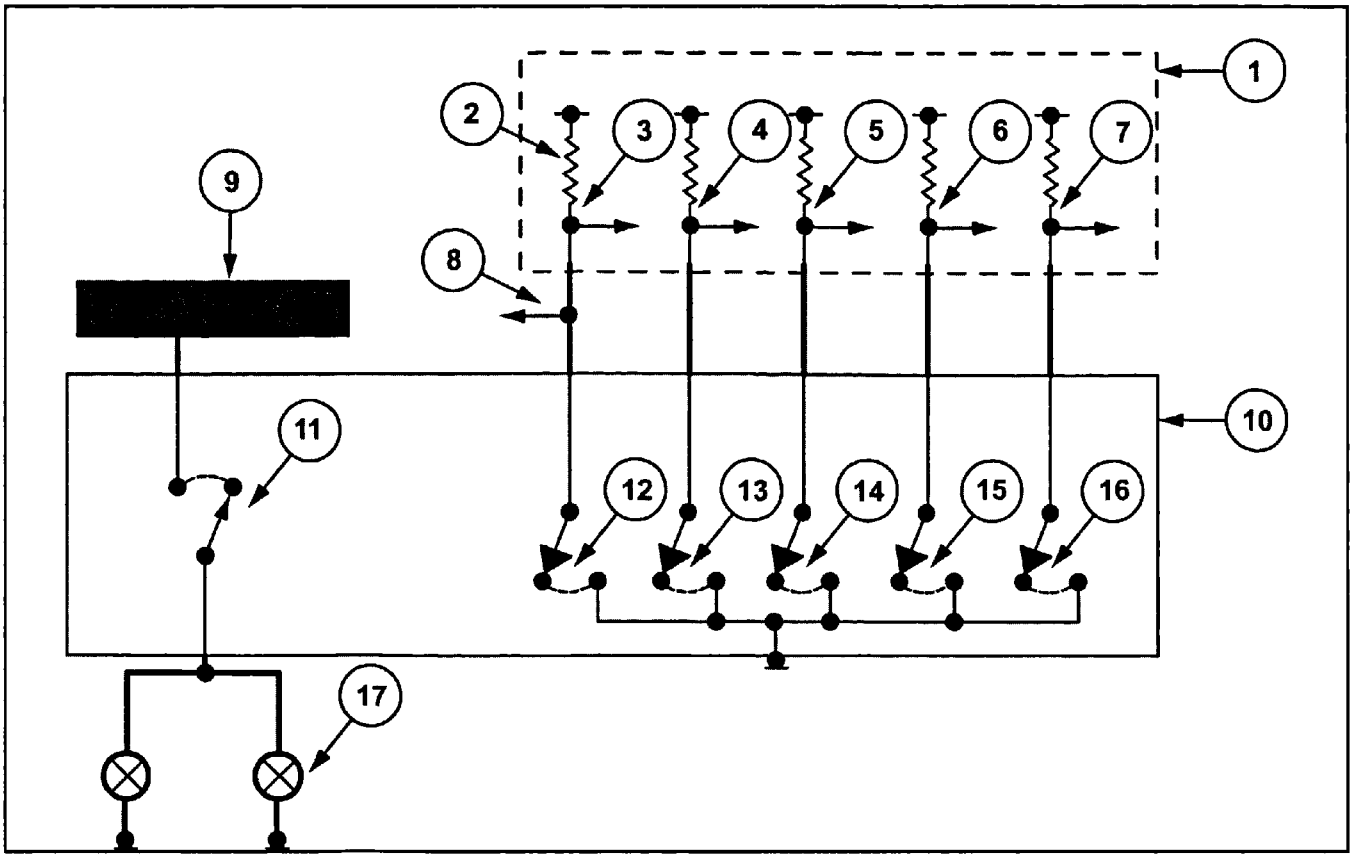

Figure 17 Transmission Range Sensor Circuit

1	Transmission Control Module	10	Transmission Range Sensor
2	Current Limiting Resistor	11	Back-up Lamp Switch
3	TRS T41 Sense	12	(C1)
4	TRS T42 Sense	13	(C2)
5	TRS T3 Sense	14	(C3)
6	TRS T1 Sense	15	(C4)
7	TRS T2 Sense	16	C5
8	To PCM	17	Back-up Lamp
9	Ignition		

Shift Lever Position (SLP) Logic

The primary function of shift lever position (SLP) logic is to provide safe and continuous, but limited, operation of the transmission with the presence of an invalid or transition input code. The SLP logic function screens the input codes from the switches and provides an SLP output signal to control actual gear selection.

Inputs include the codes indicated by the TRS current shift lever position, pressure switch indications, and the speed ratio data from the input and output speed sensors.

Shift lever position becomes the PRNDL input to most of the other functions in the TCM.

TRS switch input codes are decoded to determine the physical manual valve position. Temporary or invalid TRS switch input codes cause the controller to utilize solenoid and pressure switch feedback to provide limited operation. This may result in a modified PRNDL display.

ACTIVITY 6.2 SHIFT POSITION ANALYSIS

For this activity, complete the following sheet by performing the steps on the classroom vehicle.

1. Go to the classroom vehicle and establish communication with the DRBIII®.
2. Go to "System Test".
3. Perform a "Shift Lever Test".
4. In the space provided below, write whether the test passed or failed and the associated PRNDL code displayed.

   _____

   If the test failed, proceed to step 5, otherwise go to step 7.
5. Perform the Shift Lever Test again, but this time when the DRBIII® prompts you to "Place in Autostick", make sure to hold it in each position long enough to get a valid test result.
6. In the space provided below, write whether the test passed or failed and the associated PRNDL code displayed.

   _____
7. Go into "Monitors". What gear position information is available on this screen?

   _____
8. Run through all gear positions and complete the chart below. For an example, the switch states for Park are already provided.

ACTIVITY 6.2 SHIFT POSITION ANALYSIS

Op = switch is open
Cl = switch is closed

Normal 45RFE TRS Switch States in Order

	Park	TR 1	Reverse	TR 2	Neutral 1	Neutral 2	TR 3	Drive	TR 4	Manual 2	TR 5	Manual 1
C1 (T41)	Cl											
C2 (T42)	Cl											
C3 (T3)	Op											
C4 (T1)	Op											
C5 (T2)	Cl											

9. Exit the DRBIII®. You are finished with this activity.

Pressure Switches

The RFE has five pressure switches: L/R pressure switch, 2C pressure switch, 4C pressure switch, OD pressure switch and the UD pressure switch.

Transmission pressure switches are needed to indicate to the TCM if hydraulic pressure is present or not in a particular clutch circuit. The transmission control relay (TCR) is responsible for sending fused battery voltage to all the pressure switches. The pressure switches also share the same common ground. The pressure switches are not powered-up prior to the relay energizing so there should be no voltage at any of the pressure switches. If voltage is present before the relay is energized, the problem could be with the switched battery circuit. Pressure switch input to the TCM is also needed to determine if a loss of pump prime has occurred.

The switches are serviced with the solenoid/pressure switch assembly.

When all of the switches are open (no pressure present), the TCM monitors approximately 12 volts at the respective sense pins. When one of the switches closes, for example the low/reverse pressure switch, a path to ground is completed. In this condition the voltage at the TCM sense pin drops to near-zero volts. Internally, the TCM can now factor in the status of the low/reverse solenoid as being actuated. The other two pressure switches function similarly. A DTC is set if the TCM senses any switch open or closed at the wrong time in a given gear.

The pressure switches do not indicate how much pressure exists, though they do open at approximately 11 psi and close at approximately 23 psi. When one of the solenoids operates, hydraulic fluid pressure is applied to the appropriate circuit. By sensing the voltage drop when one of the pressure switches closes, the TCM is able to know if the hydraulic/mechanical portion of the control system is functioning properly. The TCM also uses the pressure switch input to determine if a loss of pump prime has occurred and to engage First gear if the shift lever electrical signal is incorrect.

Prior to energizing the transmission control relay, the TCM checks for a no voltage condition at the transmission control relay sense pin. This check is performed to verify the relay contact is not stuck closed. After this check is completed, the voltage of the pressure switches in the solenoid/pressure switch assembly is checked. Since the solenoid/pressure switch assembly is not powered-up prior to energizing the relay, there should be no voltage on any of the pressure switches; otherwise, there is a problem in the switched battery circuit.

Faulty pressure switches set DTCs. The customer may complain of a no shift or hard shift condition. These DTCs put the vehicle into limp-in. The DTCs are usually caused by faulty circuits, loose valve body, plugged filter, or defective solenoid/pressure switch assembly. Refer to Table 3 for an overview of normal pressure switch states in various gear applications.

What gear you are in

Table 3 Normal Pressure Switch States - RFE Series

Gear Position	L/R Switch	2C Switch	4C Switch	UD Switch	OD Switch
Reverse	Open	Open	Open	Open	Open
Park/Neutral	Closed	Open	Open	Open	Open
1st	Closed*	Open	Open	Closed	Open
2nd	Open	Closed	Open	Closed	Open
2nd Prime	Open	Open	Closed	Closed	Open
3rd	Open	Open	Open	Closed	Closed
4th	Open	Open	Closed	Open	Closed
5th	Open	Open	Open	Open	Closed

*L/R closed below 100 output RPM and opened above 150 rpm in First gear.

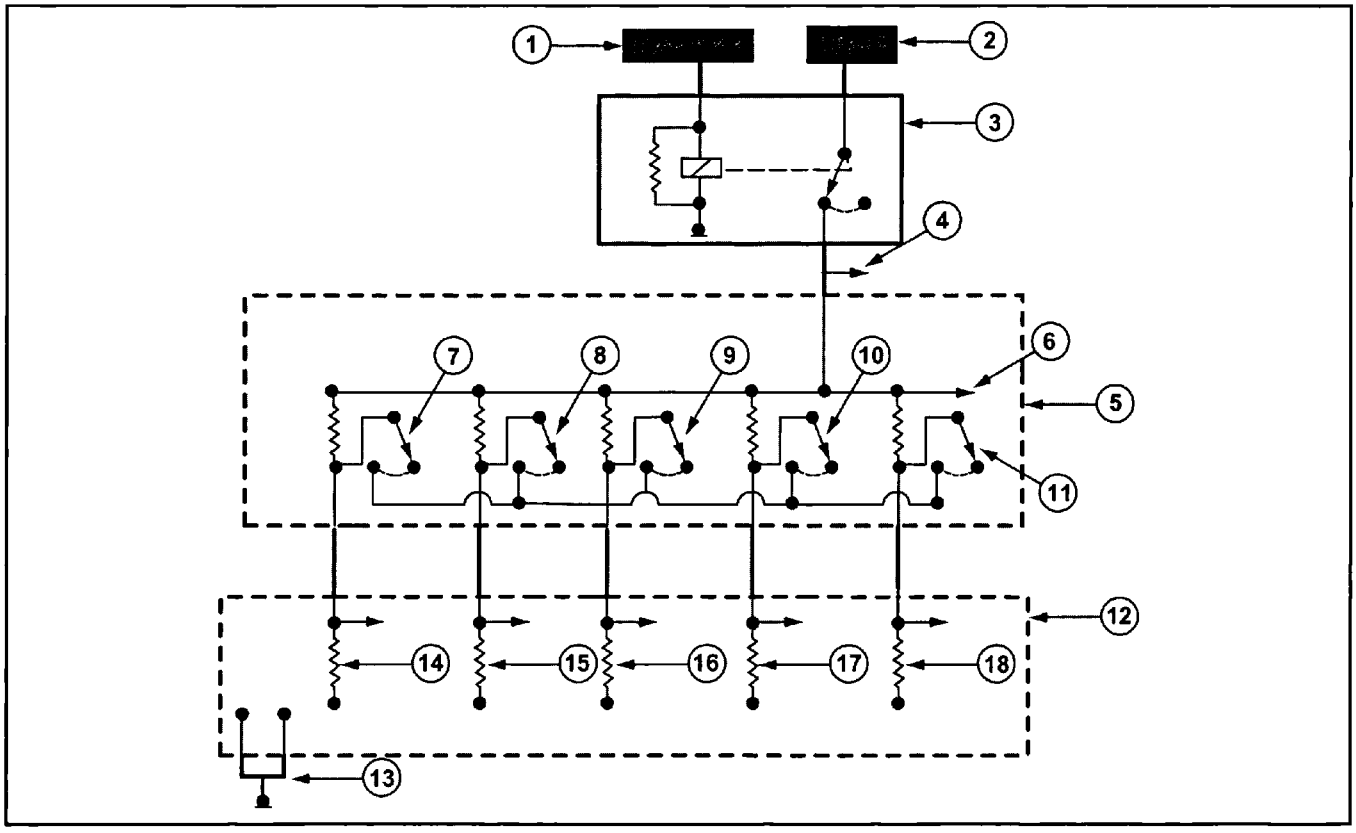

Figure 18 Pressure Switch Circuit

1	12 V from TCM	10	2C Pressure Switch
2	Bused B+	11	Overdrive Pressure Switch
3	Transmission Control Relay	12	Transmission Control Module
4	To TCM	13	Ground
5	Solenoid/Pressure Switch Assembly	14	Underdrive Pressure Switch Sense
6	To Solenoids	15	L/R Pressure Switch Sense
7	Underdrive Pressure Switch	16	4C Pressure Switch Sense
8	L/R Pressure Switch	17	2C Pressure Switch Sense
9	4C Pressure Switch	18	Overdrive Pressure Switch Sense

Related DTCs

The following DTCs are directly related to the pressure switch circuits:

- DTC 84 (P0871) "OD Pressure Switch Circuit"
- DTC 82 (P0846) "2C Pressure Switch Circuit"
- DTC 81 (P0841) "L/R Pressure Switch Circuit"
- DTC 88 (P0988) "4C Pressure Switch Circuit"
- DTC 90 (P0876) "UD Pressure Switch Circuit"

ACTIVITY 6.3 PRESSURE SWITCH ANALYSIS

For this activity, perform the following steps on the classroom vehicle.

1. Go to the classroom vehicle, connect the DRBIII® and establish communication.
2. Lift the vehicle off the ground about one foot.
3. Create a custom display on the DRBIII® that shows pressure switches and gear position.
4. Start the vehicle, run through all gears and at the same time observe the readings on the DRBIII®. Complete the chart below.

RFE Series

Gear Position	L/R Switch	2C Switch	4C Switch	UD Switch	OD Switch
Reverse					
Park/Neutral					
1st					
2nd					
2nd Prime					
3rd					
4th					
5th					

5. Does the chart you filled in above match the chart in the Service Information?

   YES NO
6. When finished, turn off the engine, lower the vehicle, and exit the DRBIII®.

Transmission Temperature Sensor

The transmission temperature sensor (TTS) is a variable resistance, negative temperature coefficient (NTC) thermistor. As the transmission fluid temperature increases, the resistance of the sensor decreases. As the transmission fluid temperature decreases, the resistance of the sensor increases. The TCM sends five volts to the TTS. Monitored voltage is an approximately five volts at cold start-up. As transmission fluid temperature increases, the resistance of the TTS decreases and monitored voltage at the TCM decreases.

When a calculated transmission fluid temperature is reached, (approximately 130 degrees F or 1.25 volts) the TCM switches to a different internal resistance value and the voltage seen by the TCM is around 4 volts.

The transmission temperature sensor (TTS) is located in the TRS. The purpose of the TTS is to provide transmission fluid temperature information to the TCM. The TCM, in turn, uses the information to assist in shift scheduling.

In the event of transmission temperature sensor failure,the engine coolant temperature (ECT) sensor is also used by the TCM to help calculate the transmission fluid temperature.

The PCM monitors the transmission fluid temperature at all times during transmission operation. The PCM requires transmission fluid temperature information to determine cooling fan operation and engine speed.

Negative temperature coefficient (NTC) thermistors rely on temperature to change in resistance. The TTS, IAT and engine coolant temperature sensors are good examples of NTC thermistors. As temperature increases, resistance decreases and vice versa.

Transmission shift quality and timing can be affected in the event that a sensor may become faulty. If the transmission temperature sensor fails, the TCM defaults to a fluid temperature which is calculated from a combination of other inputs, including battery temperature, engine coolant temperature and in-gear run time.

A faulty transmission temperature sensor sets a DTC. The DTC sets after three consecutive starts. Prior to setting the DTC the transmission may operate in the wrong shift schedule. This condition does not cause the transmission to go into limp-in and is usually caused by a faulty TRS or wiring/connector problem in the transmission temperature circuit.

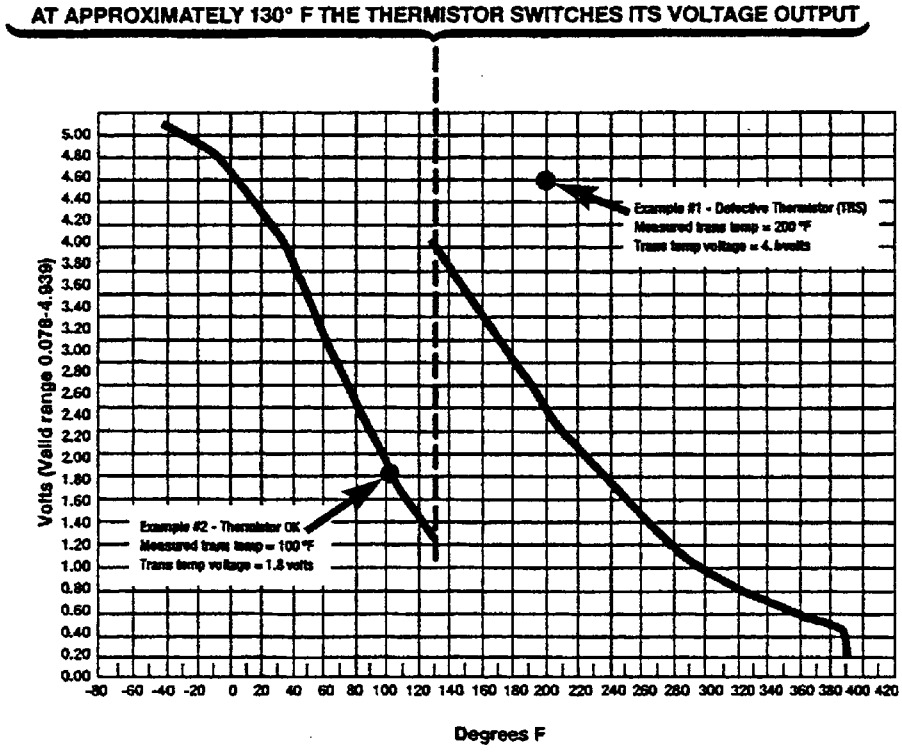

Related DTCs

The following DTCs are directly related to the transmission temperature circuit:

- DTC 7A (P0711) "Transmission Temperature Sensor Performance"
- DTC 7B (P0712) "Transmission Temperature Sensor Low"
- DTC 7C (P0713) "Transmission Temperature Sensor High"
- DTC 7D (P0714) "Transmission Temperature Sensor Intermittent"
- DTC 75 (P0218) "High Temperature Operation Activated"

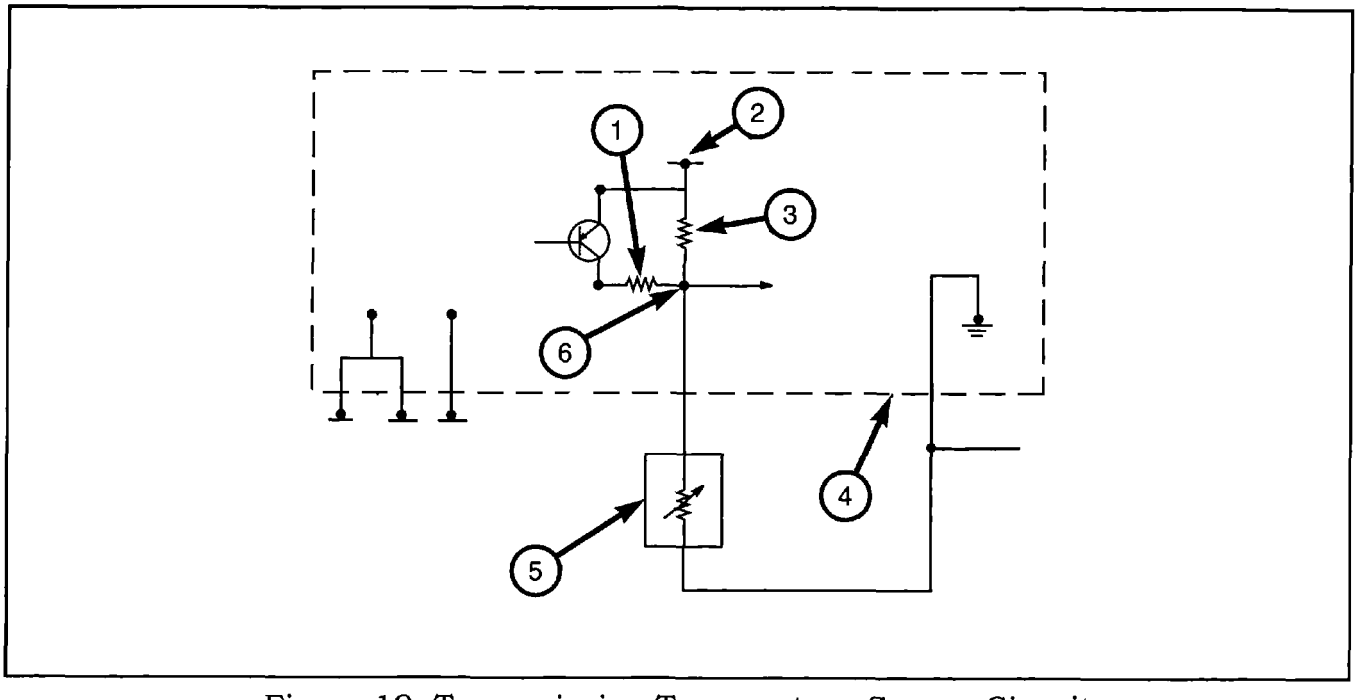

Figure 19 Transmission Temperature Sensor Circuit

1	1K Resistor	4	Transmission Control Module
2	5-Volt Circuit	5	Transmission Temperature Sensor
3	10K Resistor	6	Trans Temp Signal

Table 4 Shift Schedules

Operation	Characteristics	Functions
Extreme Cold	Oil temperature at start-up below –16° F	• Goes to "cold" schedule above -12° F oil temperature • Park, Reverse, Neutral, First, Third, and no Second for the RFE series (prevents shifting which may fail a clutch with frequent shifts)
Cold	Oil temperature at start-up above –12° F and below 36° F	• Goes to "warm" schedule above 40° F oil temperature • Delayed 2-3 up shift (approximately 22-31 mph) • Delayed 3-4 up shift (45-53 mph) • Early 4-3 coast down shift (approximately 30 mph) • Early 3-2 coast down shift (approximately 17 mph) • High speed 4-2, 3-2, 2-1 kick down shifts are prevented • NO EMCC
Warm	Oil temperature at start-up above 36° F and below 80° F	• Goes to "Hot" schedule above 80° F oil temperature • Normal operation (up shift, kick downs and coast downs) • NO EMCC

Table 4 Shift Schedules (Continued)

Operation	Characteristics	Functions
Hot	Oil temperature at start-up above 80° F	• Goes to "Overheat" schedule above 240° F oil temperature • Normal operation (up shifts, kick downs and coast downs) • Full EMCC, and PEMCC
Overheat	Oil temperature above 240° F or engine coolant above 230° F	• Goes to "Hot" below 230° F oil temperature • Delayed 2-3 up shift with Second gear PEMCC operation • Delayed 3-4 up shift with Third gear EMCC operation • Sets fault code

ACTIVITY 6.4 SHIFT SCHEDULING

For this activity, you are presented with driving conditions that can effect a transmission operation. To successfully complete this exercise you need to be familiar with and understand normal transmission operation.

A 2000 Grand Cherokee equipped with a 45RFE transmission is operated under the following conditions:

It is a mid-January morning in Minnesota and the owner starts the vehicle to let it warm up. The transmission fluid temperature is -25° F.

Answer the following questions:

1. Under these conditions, which shift schedule is the TCM operating?
   a. Extreme cold.
   b. Cold.
   c. Warm.
   d. Hot.
2. If the customer is to drive the vehicle under these conditions, which gears are available?
   a. Park, Reverse, First and Neutral only.
   b. Park, Neutral, First and Second only.
   c. First, Second, Third and Neutral only.
   d. Park, Reverse, Third and Neutral only.

After letting the vehicle warm up for a couple of minutes, the customer begins driving to work. The TCM senses the oil temperature has warmed up to approximately -11° F. While accelerating on the expressway, the customer is concerned because it seems as if engine RPM is high and the transmission is hard up shifting from Second to Third gear.

3. Is this normal operation?
   Yes No
4. Which shift schedule is being used?

   _____

5. *After driving for a few miles, the oil temperature rises to approximately 25° F. As the customer gets off the expressway and decelerates, it is noticed the transmission is down shifting early. Concerned there is something wrong with the transmission, the customer pulls into a dealership service department and explains the situation to two technicians.*

   Technician A says, "There may be something wrong with your transmission. It sounds like you might have a failed clutch or maybe a bad temperature sensor. If this sensor fails then the transmission does not up shift to Third gear."

   Technician B says, "It sounds like normal 45RFE operation. During cold weather like this, the transmission delays shifts to Third gear in order to prevent possible clutch damage. As it warms up, it continues to modify the shift pattern until it has reached normal operating temperature."

   Who is correct?

   Technician A Technician B

6. Given a vehicle with an RFE series transmission, the customer complains of high engine RPM when it is cold outside.

   Technician A says, "There is no 3-4 up shift due to low ambient temperature.

   Technician B says, "There is no torque converter lock-up when ambient temperatures are below 65° F.

   Which technician is correct?

   a. Technician A
   b. Technician B
   c. Both Technician A and B
   d. Neither Technician A or B

Throttle Position Sensor (TPS)

Throttle position sensor (TPS) input is used to assist the TCM in determining shift points. The TPS is a three wire variable sensing device.

The TPS is a variable resistance-sensing device. The TPS has three wires. One wire from the TPS is for ground and is spliced to both the TCM and PCM. The second wire is for the 5-volt TPS supply voltage that is provided by the PCM. The third wire is a TPS sense wire and is also spliced to the TCM and PCM.

As the accelerator pedal is pressed and or released, a potentiometer wiper inside the TPS sweeps across a resistance element also inside the TPS. The monitored voltage at the TCM and PCM sense pins increases as the throttle plate is opening and decreases as the throttle plate is closing. The voltage ranges between approximately 0.6 volts (for closed throttle) up to approximately 4.5 volts (wide-open throttle).

A faulty TPS does not always set a DTC. In the event that the TPS is not operating properly, the customer complaint would likely be the transmission shudders during a shift, or the shift between gears lags or is delayed. This condition does not cause the vehicle to go into limp-in and is usually caused by a faulty TPS or TPS wiring circuit, or a TCM connector problem.

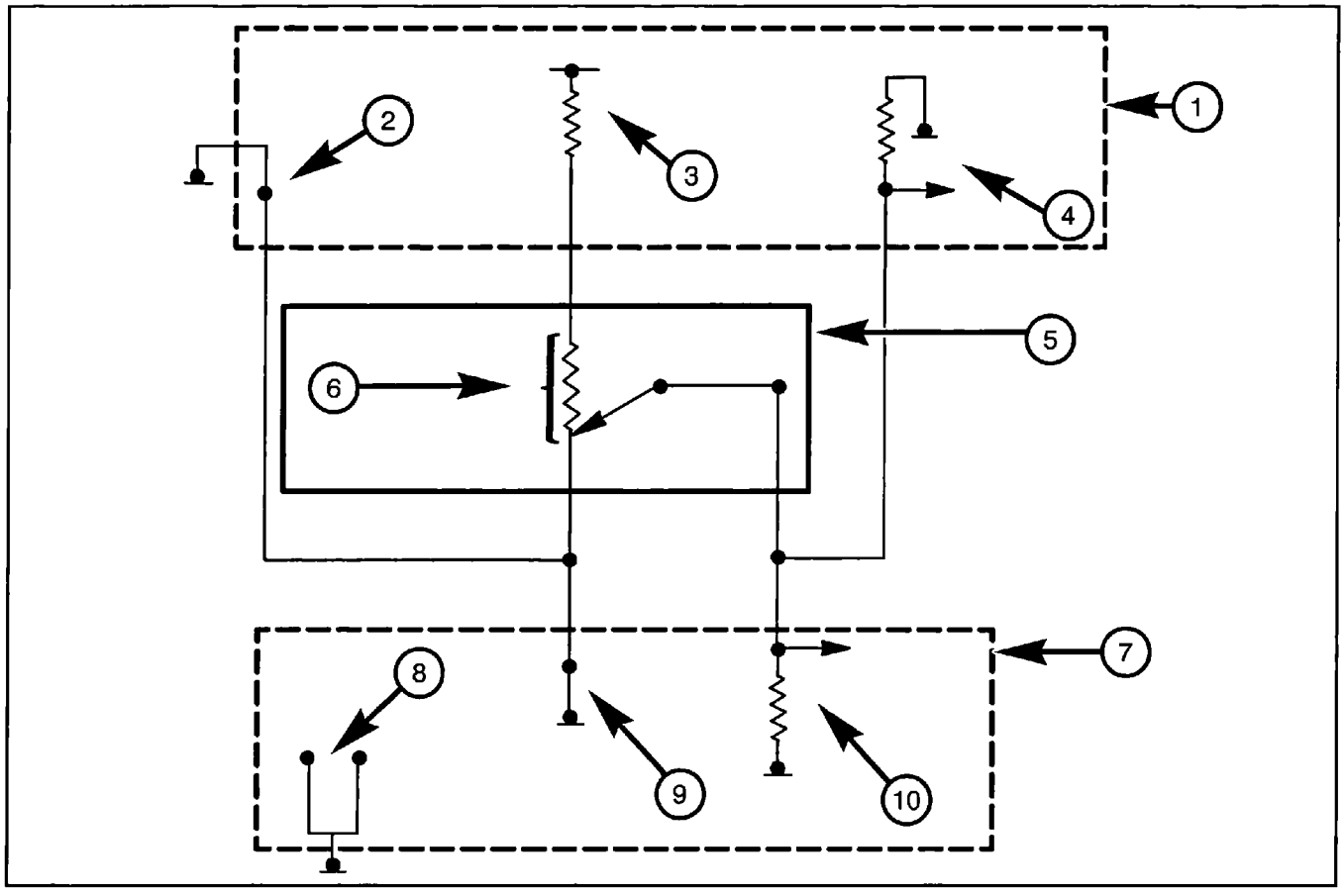

Figure 20 Throttle Position Sensor Circuit (Closed Throttle)

1	Powertrain Control Module	6	Voltage Dropped Across MAX Resistance at Closed Throttle
2	Sensor Ground	7	Transmission Control Module
3	5-Volt Supply	8	Ground
4	Throttle Position Sensor Sense	9	Sensor Ground
5	Throttle Position Sensor (Shown Fully Closed Position)	10	Throttle Position Sensor Sense

Related DTCs

The following DTCs are directly related to the TPS circuit:

- DTC 29 (P0124) "Throttle Position Sensor/APPS Intermittent"
- DTC 2A (P0122) "Throttle Position Sensor/APPS Low"
- DTC 2B (P0123) "Throttle Position Sensor/APPS High"

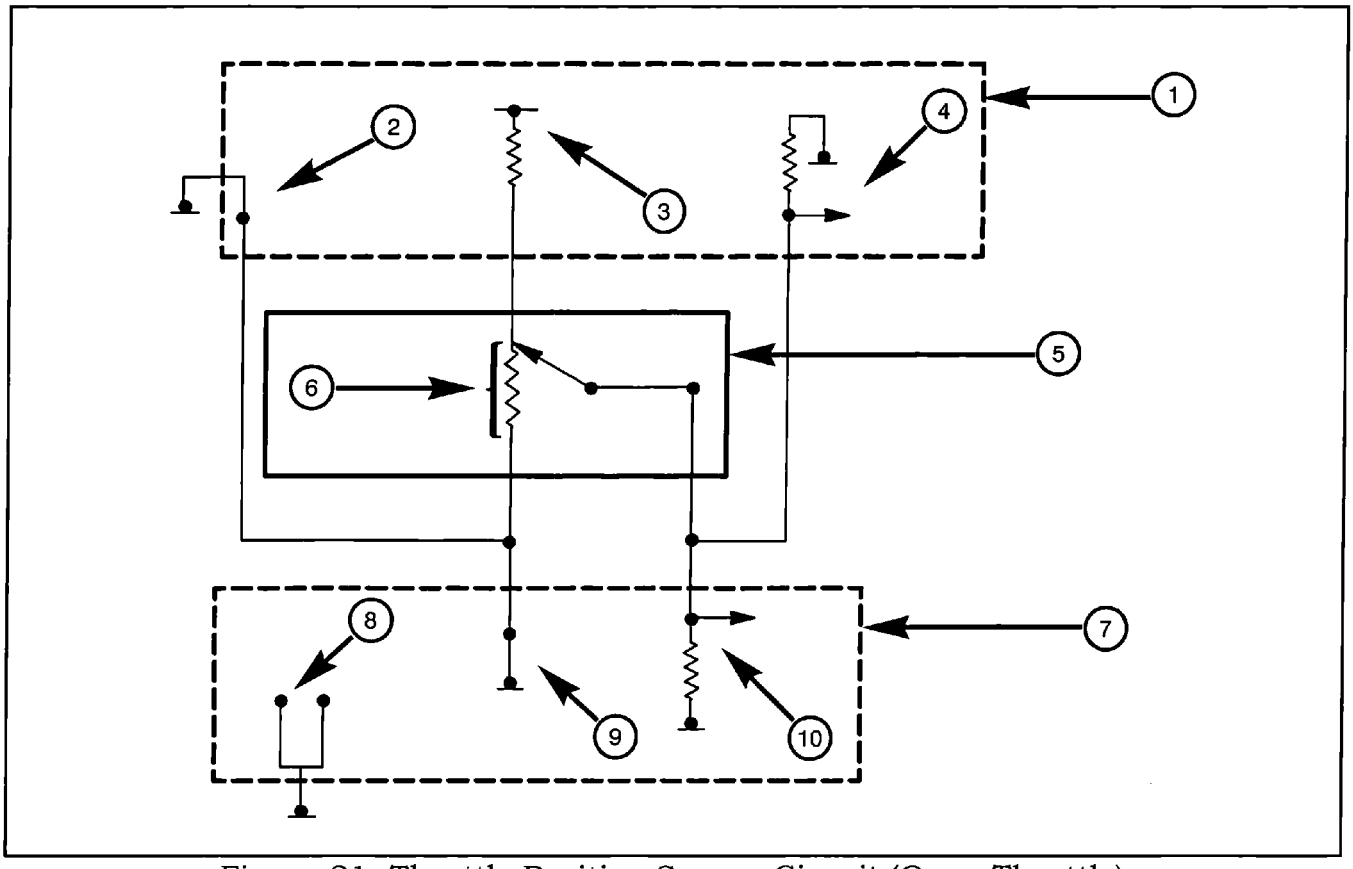

Figure 21 Throttle Position Sensor Circuit (Open Throttle)

1	Powertrain Control Module	6	Voltage Dropped across MIN Resistance at WOT
2	Sensor Ground	7	Transmission Control Module
3	5-Volt Supply	8	Ground
4	Throttle Position Sensor Sense	9	Sensor Ground
5	Throttle Position Sensor (Shown Fully Open Position)	10	Throttle Position Sensor Sense

ACTIVITY 6.5 TPS ANALYSIS

For this activity, complete the following sheet by performing the steps on the classroom vehicles.

1. Go to the classroom vehicle, connect the DRBIII® and establish communication.

   Go to "Sensors", then "Throttle Position Sensor Circuit" (wide-open throttle).
2. Read the TPS volts. Record your reading below.
3. What is reading when it is closed? _____
4. What is reading when it is wide open? _____
5. Slowly open and close the throttle. Observe how the voltage makes a smooth transition.
6. Set up the PEP as follows:
   - Go to DRBIII® "Standalone"
   - Select "Lab Scope", "Live Data"
   - Select "5V Sensor" and then press F2 for "Scope"
   - Hook up Channel One and then press F3 to start
7. Open and close the throttle and observe the change in the TPS signal. The advantage of using the lab scope display is that it gives you not only the voltage value but also the voltage value over time.
8. On the TCM connector, what is the pin number for the TPS? _____
9. Return all equipment to its original condition.

Crankshaft Position (CKP) Sensor

The purpose of crankshaft position (CKP) sensor input is to provide the TCM with the direct engine speed signal.

The crankshaft position (CKP) sensor is a Hall-effect sensor and is needed to supply the TCM with engine speed data. The PCM sends approximately 5 or 9 volts to the CKP. Voltage is needed to operate the Hall-effect "chip" and the electronics inside the sensor.

By registering a change in voltage from 5 volts to 0 volts on a second wire, the PCM and TCM identify crankshaft position when signaled by the CKP.

The Hall-effect sensor contains a powerful magnet. As the magnetic field passes over the dense portion of the crankshaft counterweight, the monitored voltage at the TCM and PCM drops to approximately 0.3 volts. When the magnetic field passes over the notches in the crankshaft counterweight, the magnetic field turns off the transistor in the sensor, causing the PCM to register the 5-volt signal. The PCM then converts this signal into a TCM RPM value sent to the TCM. Engine RPM is verified through a data bus signal from the PCM to the TCM to prevent false information (such as a stalled engine) from being reported. The TCM confirms, through the bus signal, that the CKP is sending a valid signal.

The CKP sensor input is applied only to the PCM. The PCM then processes the signal and provides a direct input to the TCM. This input is referred to as the "EATX RPM Signal".

A faulty CKP sensor sets a DTC. The customer complains the car does not start or the engine seems to have a misfire. This condition causes the transmission to go into limp-in. This condition is usually caused by a faulty EATX RPM signal circuit, faulty CKP sensor, or connector problem.

Related DTCs

The following DTC is directly related to the CKP sensor circuit:

- DTC 18 (P0725) "Engine Speed Sensor Circuit"

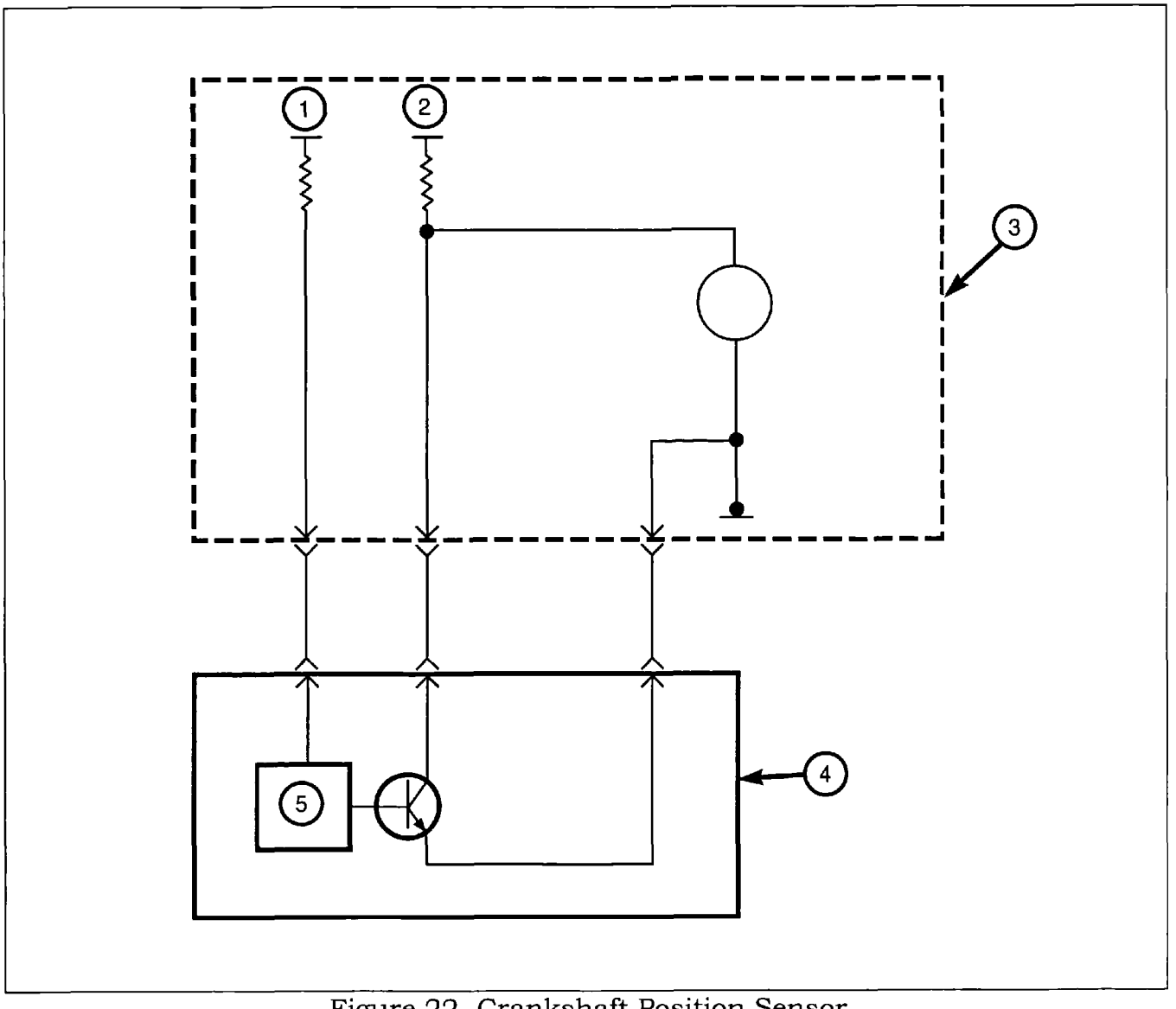

Figure 22 Crankshaft Position Sensor

1	Crank Position Sense 9V	4	Crank Position Sensor
2	Torque Reduction Link	5	Hall Effect Switch
3	Transmission Control Module		

ACTIVITY 6.6 CKP SENSOR ANALYSIS

For this activity, complete the following sheet by performing the steps on the classroom vehicle.

1. Go to the classroom vehicle, connect the DRBIII® and establish communication with the TCM.
2. Start the engine and let it idle.
3. With the DRBIII®, access the "Sensors" screen in "Transmissions" and observe the "Engine RPM" value. This value is taken from the CKP sensor. Record the reading at idle below.

   _____

4. What CKP sensor information can be found under the "Inputs/Outputs" menu?

   _____

5. Can "Engine Speed" be found under the "Monitors" menu?

   Yes No

6. Go to "Engine" and access the "Sensors" menu.
7. How does the CKP sensor signal appear under this menu?

   _____

8. How does the CKP sensor signal appear under the "Input/Output" menu? _____

   _____

9. Shut down the engine and exit the DRBIII®.
10. List two possible causes for DTC 18 (P0725) "Engine Speed Sensor Circuit": ___

    _____

Input/Output Speed Sensors

Input and output speed sensors generate an AC signal and are primary inputs to the TCM. The sensors are needed to provide the TCM with gear ratio information, torque converter clutch slippage, torque converter element speed and CVI calculations.

The input and output speed sensors are located on the transmission. Input and output speeds are primary inputs to the TCM. They are necessary to achieve the adaptive control feature of the transmission.

If gear/speed ratios do not compare to known gear ratio, the corresponding DTC is set (codes 50 (P0736) through 55 (P1736)). An excessive change in input or output speeds (intermittent signal) results in codes 56 (P0715) and/or 57 (P0720) being set. After a TCM resets in Neutral, erratic input and output speed sensor signals indicate a loss of sensor ground. This sets DTC 58 (P1794). The DTCs cause the vehicle to go into limp-in and this is usually caused by internal transmission failure, faulty wiring, internal seal leakage, worn support ring seals, and/or defective input or output speed sensors.

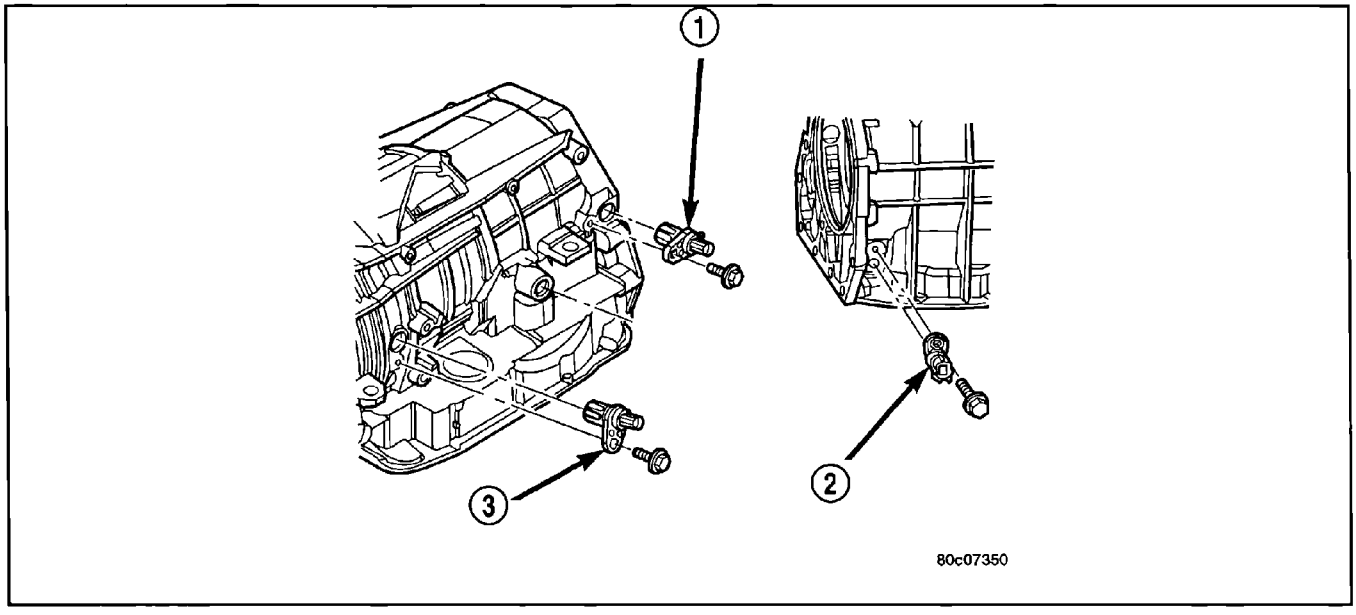

Figure 23 Input/Output Speed Sensor Location

1	Output Speed Sensor	2	Input Speed Sensor
2	Line Pressure Sensor		

The input speed sensor and output speed sensor are used to provide input to the TCM regarding input shaft speed and output shaft speed. They are two-wire magnetic pickup devices that generate AC signals as rotation occurs. Each sensor coil should have between 300 and 1,200 ohms resistance when tested with an ohmmeter.

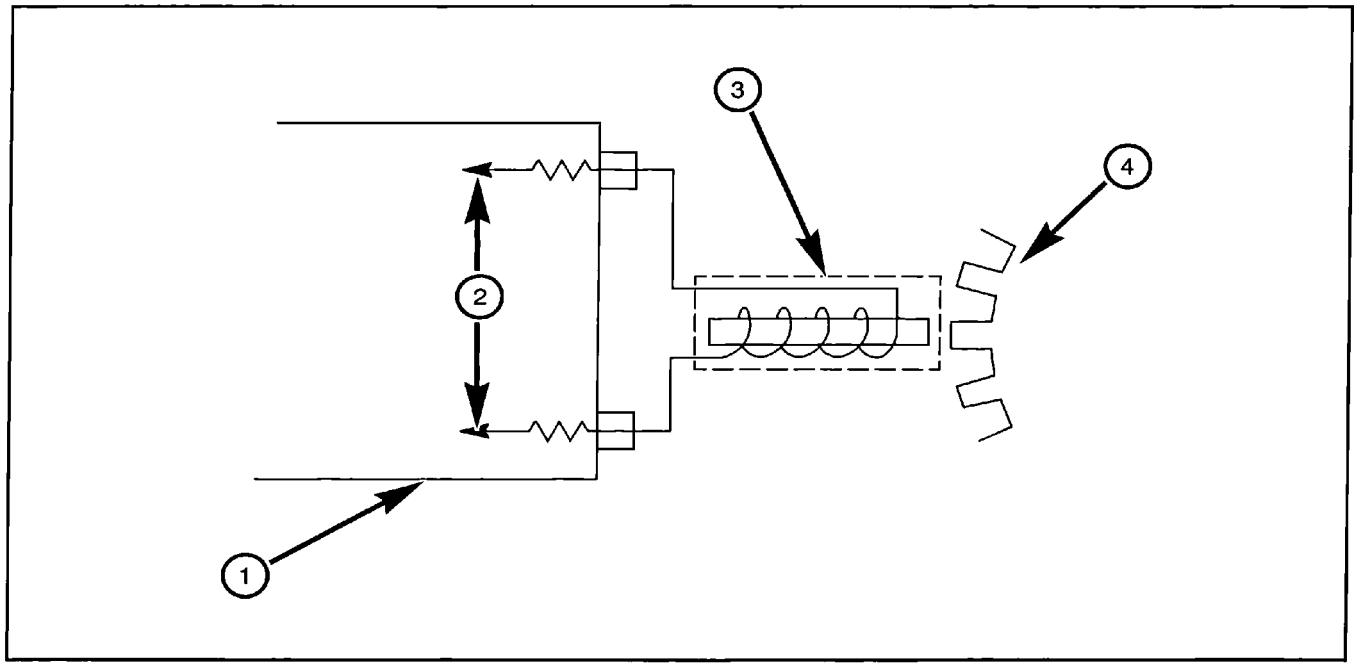

Figure 24 Speed Sensor Theory of Operation

1	Transmission Control Module	3	Input or Output Speed Sensor
2	AC Input from Sensor	4	Input Clutch Hub or Rear Planetary Carrier Parking Pawl Lugs

The input speed sensor provides input shaft rotational speed (based off the input clutch hub) to the TCM. The TCM compares the input signal and engine speed to determine torque clutch slippage and torque converter speed ratio.

The output speed sensor relies on the rotation of the Park gear pawl lugs to send a signal to the TCM. The input and output sensors and temperature sensor all share the same common ground.

Before a vehicle speed signal is pulsed to the PCM, the TCM or CAB applies the pinion factor which is a combination of tire size and overall top gear ratio. If no pinion factor is stored in the TCM, the speedometer does not indicate speed when the vehicle is moving.

In an RFE-equipped vehicle the distance pulse is generated by the CAB or BCM, which monitors the rear ABS speed sensor to calculate the distance pulse.

The TCM compares the input and output speed signal to determine the following:

- Transmission gear ratio
- Speed ratio error detection
- CVI calculation

Related DTCs

The following DTCs are directly related to the input/output speed sensor circuits:

- DTC 50 (P0736) "Gear Ratio Error In Reverse"
- DTC 51 (P0731) "Gear Ratio Error In 1st"
- DTC 52 (P0732) "Gear Ratio Error In 2nd"
- DTC 53 (P0733) "Gear Ratio Error In 3rd"
- DTC 54 (P0734) "Gear Ratio Error In 4th"
- DTC 55 (P1736) "Gear Ratio Error in 2nd Prime
- DTC 56 (P0715) "Input Sensor Error"
- DTC 57 (P0720) "Output Sensor Error"
- DTC 58 (P1794) "Sensor Ground Error"
- DTC 59 (P0735) "Gear Ratio Error in 4th Prime (5th Gear)

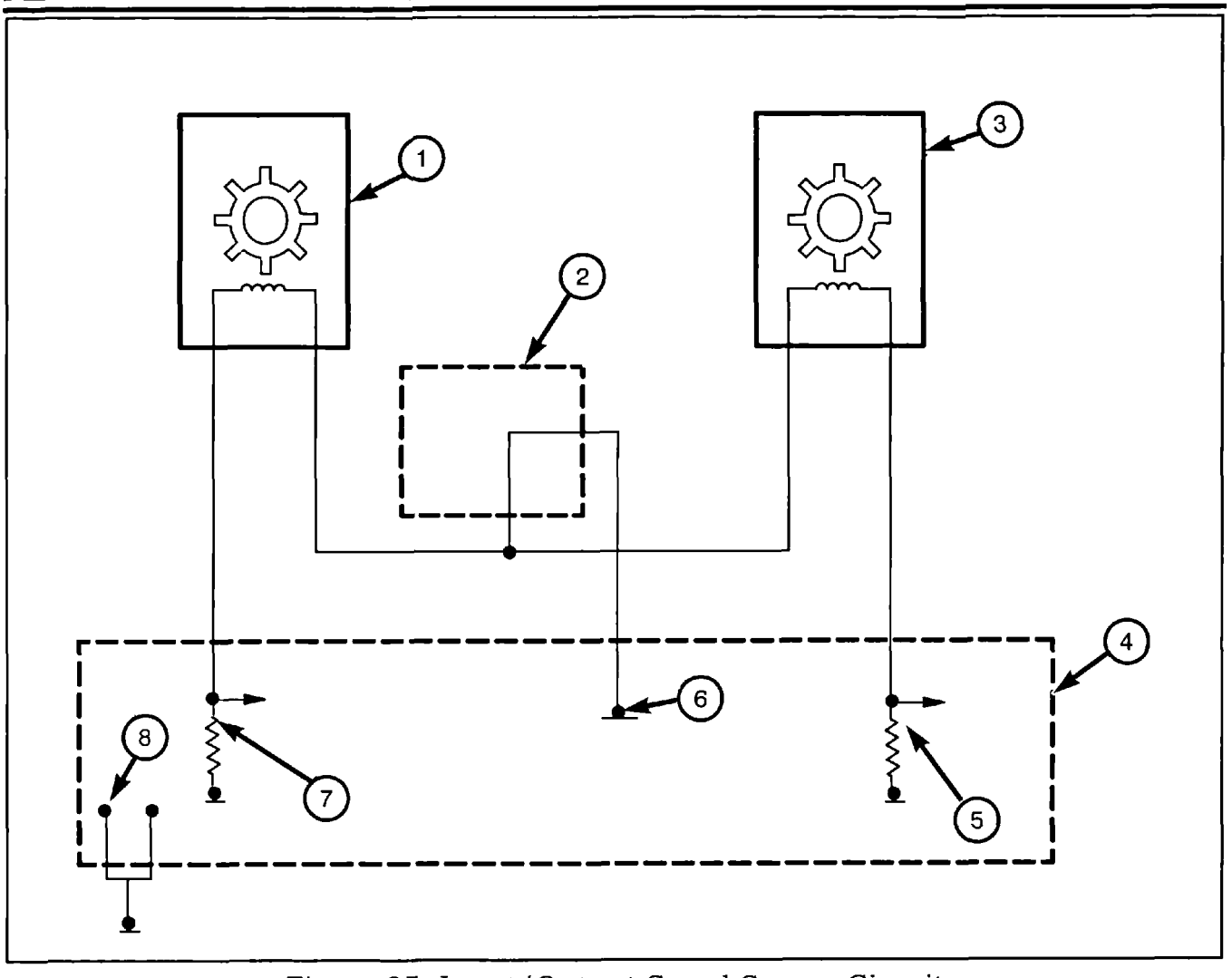

Figure 25 Input/Output Speed Sensor Circuit

1	Input Speed Sensor	5	Output Speed Sensor Signal
2	Transmission Range Sensor	6	Speed Sensor Ground
3	Output Speed Sensor	7	Input Speed Sensor Signal
4	Transmission Control Module	8	Ground

Note: The speed sensor ground is also shared by the transmission temperature sensor.

ACTIVITY 6.7 INPUT AND OUTPUT SPEED SENSOR ANALYSIS

For this activity, complete the following sheet by performing the steps on the classroom vehicle.

1. Establish communication with the DRBIII® on the classroom vehicle
2. Raise the vehicle about one foot off the ground.
3. Start the engine and go to the "Monitors" screen on the DRBIII® and select "RPM Monitor".
4. Shift the transmission through all of its gear ranges. As you do this, complete the chart below. Hold the transmission in gear long enough to observe the values on the DRBIII® screen. You will need to calculate the gear ratio yourself.

	1st Gear	2nd Gear	3rd Gear	4th Gear	Reverse
Engine RPM					
Input RPM					
Output RPM					
Gear Ratio					

5. Do the gear ratios you calculated correspond with the ratios learned in this book?

   YES NO

6. Turn off the engine and set up DRBIII® as follows:
   - Using the Analog Voltage option, make a setup that displays two scope readings.
   - Press F2 to select the scope.
   - Connect the Channel 1 lead to the input speed sensor signal pin #52.
   - Connect the Channel 2 lead to the output speed sensor signal pin #14.
   - Press F3 to view.
   - Adjust the time division to 4ms/division.
   - Start the engine.
   - Shift transmission through all of its gear ranges.
   - Observe the lab scope display.
   - What is the voltage range reading? _____
   - When finished, return all equipment to its original condition.

Overdrive OFF Switch

The overdrive OFF switch is a momentary contact switch that is hardwired to the TCM. The OD OFF switch prevents excessive shifting and potential transmission overheating when towing or carrying heavy loads. When the driver selects OD, three forward gears remain available but Fourth gear is inhibited.

Line Pressure Sensor

On the RFE series the TCM utilizes a closed-loop system to control transmission line pressure. A pressure control solenoid (variable force-type solenoid), a line pressure sensor, and the pressure regulator valve are all components of the closed-loop system. The line pressure sensor is externally mounted to the right rear corner of the RFE transmission.

The TCM calculates a desired line pressure based on inputs from the transmission and engine. The TCM also calculates torque input to the transmission and uses the torque information as the primary factor for determining the desired line pressure.

The TCM compares actual line pressure to the desired line pressure value then adjusts line pressure by varying the duty cycle of the pressure control solenoid. Maximum line pressure is achieved when the solenoid is off. When the solenoid is energized, line pressure decreases. Output pressure from the pressure control solenoid acts on the pressure regulator valve to adjust the line pressure.

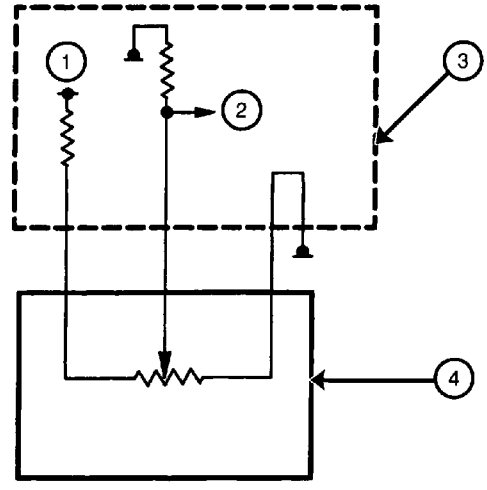

Figure 26 Line Pressure Sensor Circuit

1	5-Volt Power Supply	3	Transmission Control Module
2	Line Pressure Sense	4	Line Pressure Sensor

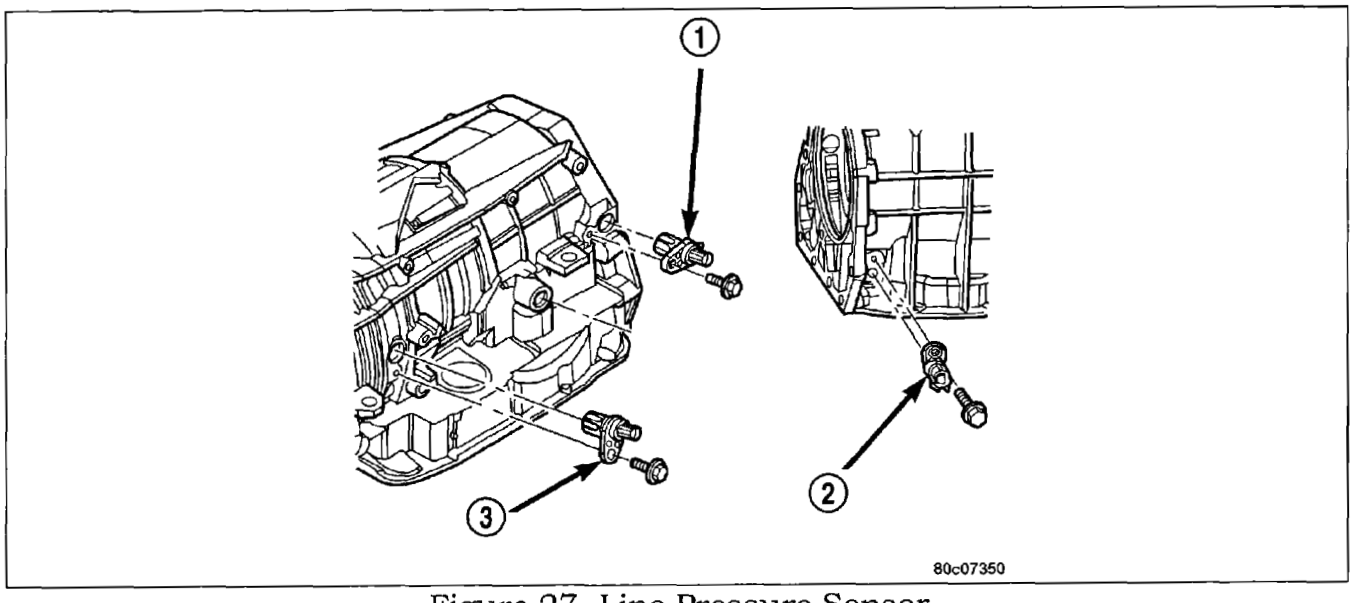

Figure 27 Line Pressure Sensor

1	Output Speed Sensor	3	Input Speed Sensor
2	Line Pressure Sensor		

Related DTCs

The following DTCs are directly related to the transmission line pressure circuit:

- DTC C9 (P0868) "Line Pressure Low"
- DTC CA (P0932) "Line Pressure Sensor Fault"
- DTC CB (P0869) "Line Pressure High"
- DTC CC (P0934) "Line Pressure Sensor Low"
- DTC CD (P0935) "Line Pressure Sensor High"

ACTIVITY 6.8 LINE PRESSURE

1. Attach the DRBIII® to the DLC and establish communication.
2. Record the following DRBIII® electronic info:

	Park	Drive	Acceleration	Reverse @ 1800 rpm
Desired Line Pressure				
PCS Duty Cycle				
Line Pressure PSI				
Line Pressure Sensor Volts				

3. What happens to line pressure after about 5 seconds in gear? _____

_____

4. What happens to line pressure upon acceleration? _____

_____

Notes:

PCI Bus

The programmable communications interface (PCI) data bus system is a single wire multiplex system used for vehicle communications. In most cases, the PCI bus wire is either yellow with a violet tracer, or violet with a yellow tracer, depending on the vehicle. Multiplexing is a system that enables the transmission of several messages over a single channel or circuit.

Many of the control modules in a vehicle require information from the same sensing device. Multiplexing reduces wire harness complexity, sensor current loads and controller hardware. Each sensing device is connected to only one controller, which reads and distributes the sensor information to other controllers over the data bus. Because each controller on the data bus can access the controller sensor inputs to every other controller on the data bus, more function and feature capabilities are possible.

Data exchange between modules is achieved by serial transmission of encoded data over a single wire. The PCI data bus messages are carried over the bus in the form of variable pulse width modulation (VPWM) signals. The bias, or pull-up voltage, which is typically 7.5 volts, is used to broadcast messages on the bus. Messages are broadcast by modulating the pulse width of the bias voltage between a high of 7.5 volts and a low of 0 volts. The termination resistor internal to the module supplies a path to ground that completes the PCI bus circuit. Termination resistance varies according to the type of module.

The Powertrain Control Module (PCM) is one of the dominant modules for the PCI data bus system. Dominant bus nodes are modules with the lowest termination resistance, usually between 1,100 and 3,000 ohms. These protect the entire bus from interference caused by radio frequency and ground noise. Standard nodes have termination resistance of about 10,500 ohms.

The body control module (BCM) utilizes integrated circuitry and information carried on the PCI data bus network along with hard-wired inputs throughout the vehicle. The BCM is designed to control and integrate many of the electronic features and functions throughout the vehicle.

When a module is transmitting on the bus, it is reading the bus at the same time to ensure message integrity. Each module is capable of receiving and transmitting data simultaneously. The PCI data bus can be monitored using the DRBIII® scan tool. It is possible for the bus to pass all DRBIII® tests and still be faulty if the voltage parameters are all within specified range and false messages sent.

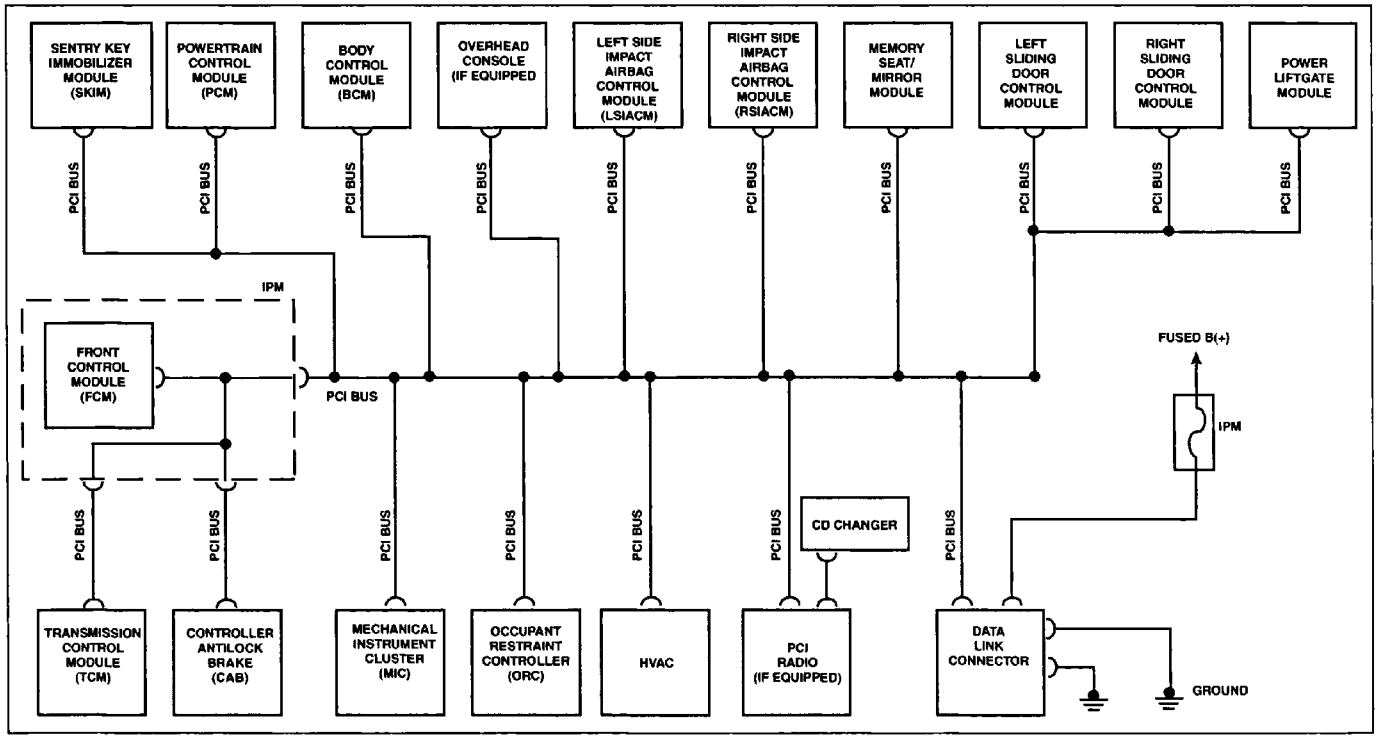

Figure 28 Bus Circuit

The DRBIII® is used to communicate with modules on the bus. When connected to the data link connector (DLC), the DRBIII® is considered a bus node. The J1850 module scan on the DRBIII® checks the communication status of each module on the bus. One thing to remember about bus diagnosis is that some vehicles have a common point for making electrical checks on the PCI bus and others do not. The key to accurate bus failure diagnosis is to break the bus circuit into manageable pieces, and then make voltage and resistance checks on those pieces to isolate the problem.

Related DTCs

The following DTCs are directly related to the transmission bus circuit:

- DTC 19 (P1694) "Bus Communication with Engine Module"
- DTC (P1687) "No Communication with MIC"

ACTIVITY 6.9 PCI BUS

This task demonstrates a process that can be followed to isolate a bus problem on a vehicle that IS NOT equipped with a diagnostic junction port.

1. Attempt to start the engine. What are the observable symptoms?

   _____

   _____

2. Connect the DRBIII® to the vehicle and perform a J1850 module scan. What are the results?

   _____

3. Connect the J1962 BOB to the DLC. Connect the red lead of a DMM to cavity 2 of the BOB and the black lead to cavity 4 or 5. Using the DMM measure bus voltage. Record the voltage.

   _____

4. Disconnect the battery. Set the DMM to ohms. If battery voltage was detected in step 3, connect the red lead to J1962 BOB cavity 2 and the black lead to the battery positive cable. Measure the resistance. If no voltage was detected in step 3, connect the black lead to the negative battery cable. Measure the resistance. Record the results.

   _____

5. What does this indicate?

   _____

6. Using the 8W-18 section of the Service Information and the vehicle, determine which modules the vehicle is equipped with. List the modules.

   _____

   _____

7. Locate the connectors where the D25 circuit can be broken down into major isolated sections. List those connectors.

   _____

ACTIVITY 6.9 PCI BUS (CONTINUED)

8. List the connector that, when separated, would split the bus into the most isolated sections.

_____

9. With the DMM red lead connected to J1962 BOB at cavity 2, measure bus resistance. The DMM ground lead should still be connected to battery negative. Disconnect the harness at the connector that was identified in step 8. Record the resistance when the connector is separated.

_____

10. What does this indicate?

_____

_____

_____

11. Go to the connector separated in step 8. Identify the cavity numbers for the D25 circuits at this connector. List the connector and cavity numbers.

_____

12. Measure the resistance on the pins. Be sure to measure the side of harness opposite of what was measured in step 8. Record the results.

_____

13. What does this indicate?

_____

14. Using Service Information section 8W-18, can the circuit be broken down further?

    Yes. No.

15. If yes, which connector should be separated next?

_____

16. Separate the connector identified in step 14. Measure the resistance from the same location in step 12. Record the results.

_____

17. What does this indicate?

_____

_____

ACTIVITY 6.9 PCI BUS (CONTINUED)

18. What is the next logical step?

_____

_____

19. If all the modules are disconnected and the resistance remains low, what does this indicate?

_____

20. Should the wiring be ruled out if the vehicle is not equipped with a module?

    Yes. No.

21. Explain.

_____

_____

22. Can the problem area be isolated?

    Yes. No.

23. Correct the problem. Verify proper operation. Clear the DTCs.

INDIRECT INPUTS

The TCM uses inputs that are broadcast across the bus and shared with other control modules. The TCM communicates with the PCM over the bus. Engine RPM, engine coolant temperature and battery/ambient temperature are among the information received by the TCM. The TCM continuously monitors the bus activity and receives the messages it needs.

The following are indirect inputs to the TCM and are covered in this section:

- Engine and body identification - from PCM/BCM
- Manifold pressure - from PCM
- Target idle - from PCM
- Torque reduction confirmation - from PCM
- Speed control ON/OFF switch - from PCM
- Engine coolant temperature - from PCM
- Ambient/Battery temperature - from PCM
- Brake status - from PCM
- DRBIII® communication - from DRBIII®

Engine and Body Identification

The TCM supports several engine models, each requiring different shift schedule and calibration constants. The TCM receives the engine model code and VIN from the PCM and stores it in non-volatile memory. Once the engine model code is established in memory, it is used to select the appropriate shift schedule and other calibrations.

Manifold Pressure

The TCM receives input from the manifold absolute pressure (MAP) sensor to evaluate engine torque load applied on the transmission input shaft. By sensing changes in the MAP value, the TCM can reduce shift hunting on steep grades by modifying the shift schedule.

Target Idle

The PCM broadcasts engine target idle speed and actual engine idle speed to the TCM. The idle air control (IAC) is used by the PCM to help regulate idle speed. The motor controls the amount of air allowed to bypass the throttle blade. The PCM controls the motor using driver circuits to position a stepper motor. The TCM uses this information to control the initial engagement of First or Reverse.

Target idle is determined by the following inputs: gear position, battery voltage, ambient/battery temperature sensor, vehicle speed sensor, throttle position sensor, and MAP sensor. The TCM compares the target idle speed against the actual engine speed to determine the learned TPS value for closed-throttle idling. This value may change due to system voltage and sensor tolerances.

Torque Reduction Confirmation

Note: Refer to the section titled TCM Outputs for a complete description of the torque reduction request function.

There are conditions when the TCM sends a direct torque management signal to the PCM via the TRD. The signal is a request for engine torque reduction during high RPM, as well as high torque shifts. The PCM reduces engine torque by shutting off a certain number of fuel injectors and retarding ignition timing slightly. The PCM sends a confirmation message back to the TCM over the communication bus. If the confirmation signal is not received by the TCM after two sequential requests, a DTC is set.

Speed Control ON/OFF Switch

The speed control ON/OFF switch is used by the TCM to modify the shift pattern when a speed control ON signal is received. This is done by allowing torque converter clutch engagement or disengagement, as well as kick down shifts.

Engine Coolant Temperature

The TCM uses the ECT sensor signal to assist in calculating transmission fluid temperature should the transmission temperature sensor fail.

Battery Temperature Sensor

The TCM uses this information to assist in estimating transmission fluid temperature. The TCM delays shifting points during cold conditions. Additionally, the TCM uses the battery temperature sensor input along with engine coolant temperature, from the ECT, to calculate transmission fluid temperature should the transmission temperature sensor fail.

Note: The battery temperature sensor and ambient temperature sensor are similar. On some vehicles, the sensor is located internal to the PCM, while on other vehicles it may be an actual sensing device located externally to the PCM.

Brake Switch

The brake switch status is broadcast across the communication bus to the TCM. The brake switch input is initially applied to the PCM; the PCM then broadcasts this information to the TCM. The TCM uses this input to ensure the torque converter clutch is disengaged when the brakes are applied.

DRBIII® Communications

The DRBIII® scan tool is considered an indirect input to the TCM because it has to use the data bus.

DIAGNOSING INDIRECT INPUT FAULTS

If it is necessary to evaluate an indirect input, go to the originating source to begin. For example, if it appears something is wrong with the ECT sensor, go to "Powertrain" in the DRBIII® and evaluate the sensor's operation there first.

DIRECT OUTPUTS

Similar to the inputs, the TCM controls both direct and indirect outputs. The TCM provides output to the following components:

Direct outputs:

- Transmission control relay
- Solenoids
- Torque reduction request signal

Indirect outputs:

- PRNDL (gear selector position) to the PCM and the BCM
- DRBIII® communication to the DRBIII®
- MIL lamp request to the PCM
- Trans fluid temperature signal to the PCM
- Vehicle speed signal to the PCM

Transmission Control Relay

The purpose of the transmission control relay, located in the integrated power module (IPM) in some vehicles, in all other vehicles in the Power Distribution Center (PDC), is to supply power to the solenoids in the solenoid/pressure switch assembly during normal operation. When the TCM receives the fused ignition input it energizes the relay by supplying 12 volts to the coil side. The relay output is fed back to the TCM. This is referred to as "switched battery". This is a sense circuit and does not supply power to the TCM.

Prior to energizing the relay, the TCM verifies the contacts are open by checking for no voltage at the switched battery terminals. After the relay is energized, the TCM monitors the terminals to verify the voltage is greater than three volts.

A faulty transmission control relay causes one or two DTCs. The DTCs cause the vehicle to go into limp-in and are usually caused by TCM circuit failure, TCM connector fault, or a faulty transmission control relay.

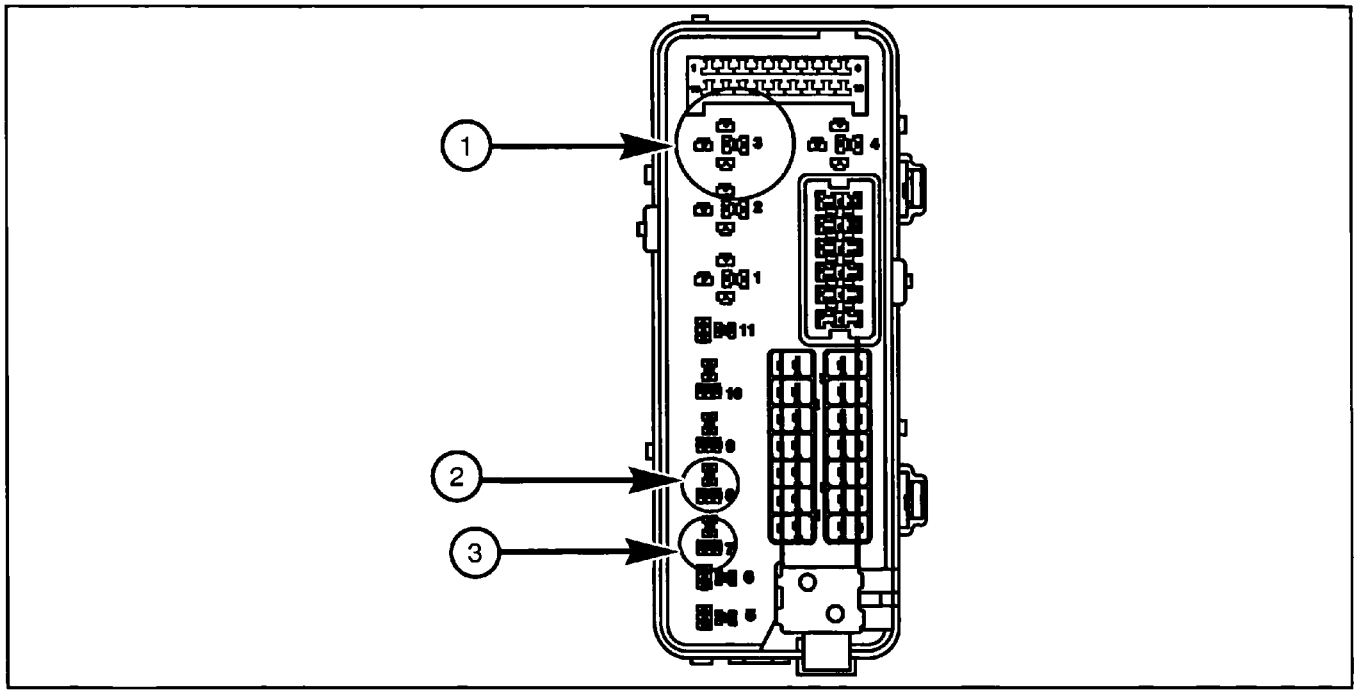

Figure 29 Transmission Control Relay

1	Automatic Shutdown (ASD) Relay	3	Transmission Control Relay
2	Engine Starter Relay		

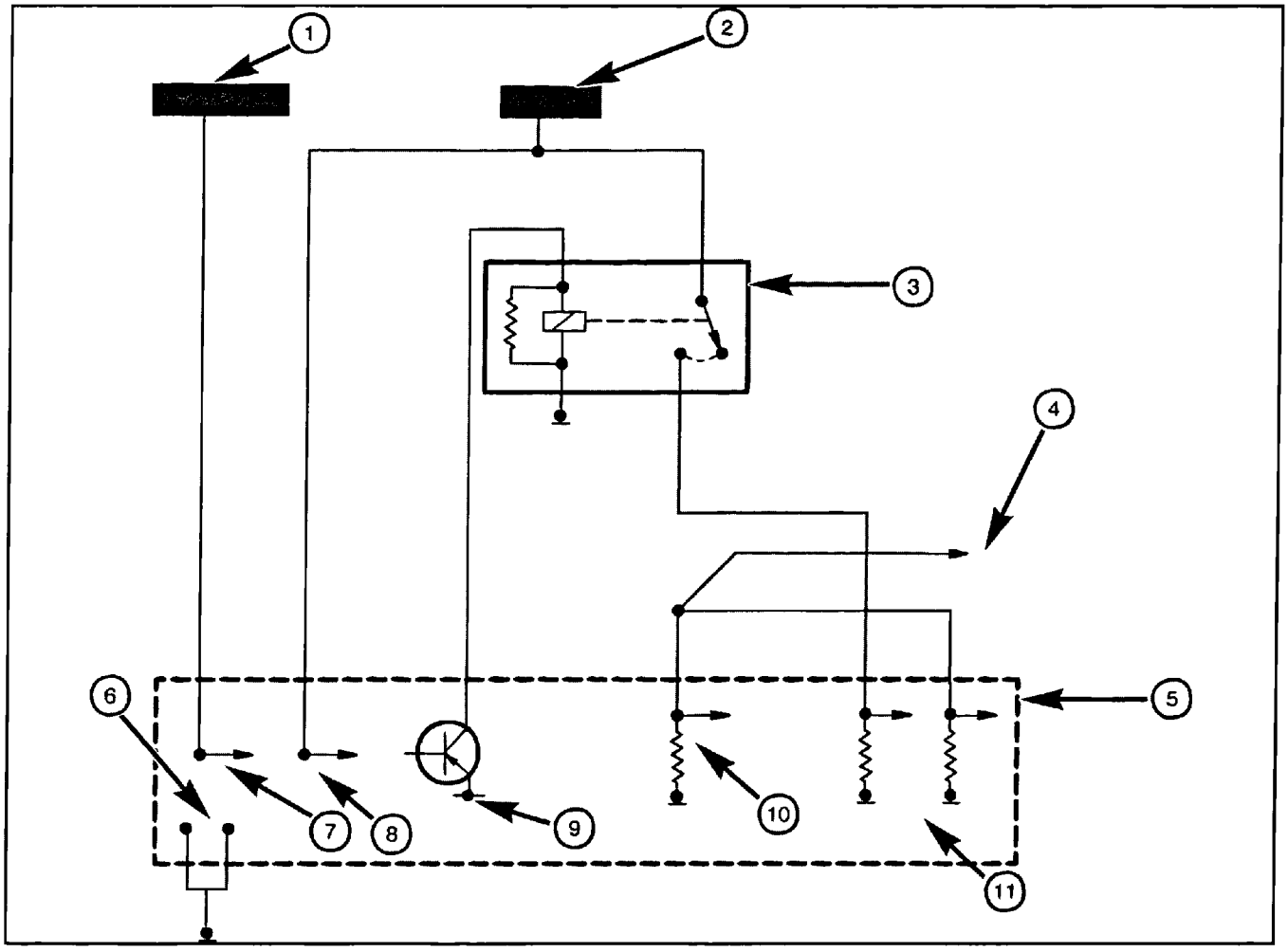

Figure 30 Transmission Control Relay Circuit

1	Fused Ignition	7	Fused Ignition
2	Fused B+	8	Fused B+
3	Transmission Control Relay	9	12v
4	To Solenoid/Pressure Switch Assembly	10	Transmission Control Relay Sense
5	Transmission Control Module	11	Transmission Control Relay Senses
6	Ground		

Solenoids

The TCM controls apply and vent functions by controlling the solenoids in the solenoid/pressure switch assembly. The solenoids receive power from the transmission control relay across a single wire. The solenoids are controlled, or grounded, by the TCM as needed. When the TCM grounds one of the solenoids, current flows through the coil of the solenoid, creating an electromagnetic force (or pull). The stem of the plunger is drawn down by the resultant magnetic field causing the ball to be pushed off or onto the seat. When a valve shifts, a channel is opened or closed, causing the hydraulic fluid pressure to be applied or vented.

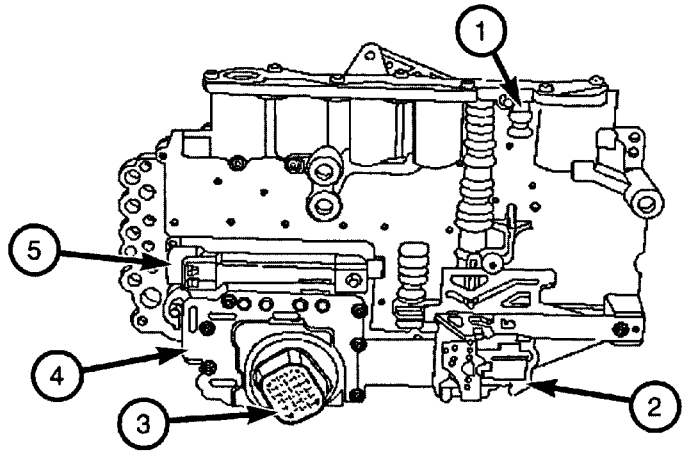

Figure 31 RFE Series Solenoid/Pressure Switch Assembly

1	Valve Body	4	Solenoid/Pressure Switch Assembly
2	Transmission Range Sensor	5	Pressure Control Solenoid
3	23-Way Connector		

To increase efficiency, the electrical current through the solenoid coil is pulse-width modulated. The circuitry within the TCM provides this pulsing signal, as well as an initial pull-in current pulse each time a solenoid is energized.

The full ON pulse time is normally around 8 milliseconds and provides rapid pull-in response time. Pull-in response time is dependent on battery voltage.

To protect against inadvertent dropout of an energized solenoid, each ON solenoid is issued a refresher pulse every 50 milliseconds. The refresher pulse is used to prevent hydraulic pressure from overcoming the solenoid's strength. The frequency is increased during shifts and as certain problems start to occur.

Note: As the CVI value increases, so does the duty cycle for the solenoid of the affected clutch.

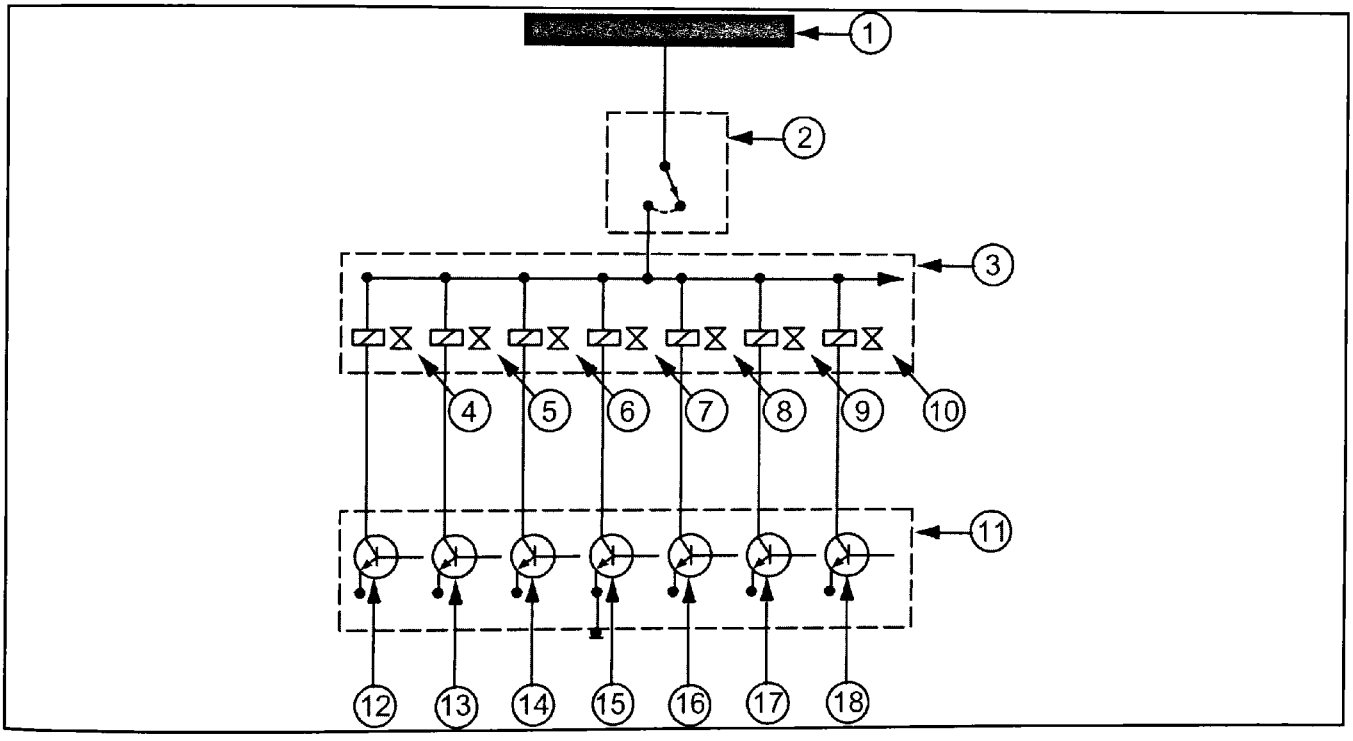

Figure 32 Solenoid Circuit

1	Fused B+	10	MS Solenoid
2	Transmission Control Relay	11	Transmission Control Module
3	Solenoid/Pressure Switch Assembly	12	Overdrive Solenoid Control
4	Overdrive Solenoid	13	Pressure Control Solenoid Control
5	Pressure Control Solenoid	14	4C Solenoid Control
6	4C Solenoid	15	2C Solenoid Control
7	2C Solenoid	16	Underdrive Solenoid Control
8	Underdrive Solenoid	17	L/R Solenoid Control
9	L/R Solenoid	18	MS Solenoid Control

Since both solenoids are normally on and normally off solenoids are used, the following logic is recognized by the TCM.

Faulty solenoids set a DTC. This condition causes the vehicle to go into limp-in and possible causes are a circuit fault between the TCM and the solenoid/pressure switch assembly or a faulty solenoid/pressure switch assembly.

Related DTCs

The following DTCs are directly related to the solenoid/pressure switch assembly:

- DTC A2 (P0845) "2C Hydraulic Pressure Test Failure"
- DTC A4 (P0870) "OD Hydraulic Pressure Test Failure"
- DTC A8 (P0987) "4C Hydraulic Pressure Test Failure"
- DTC B0 (P0875) "UD Hydraulic Pressure Test Failure"

ACTIVITY 6.10 SOLENOID OPERATION ANALYSIS

For this activity, complete the following sheet by performing the steps at the classroom vehicle.

1. Establish communication with the DRBIII® on the classroom vehicle.
2. Select "Actuator Test".
3. Perform an actuator test for the solenoids. As you do this, observe the pressure switch state readings.

Note: The gear selector must be in a forward gear to view the 4C pressure switch state.

3. Is there a pressure switch state available for the UD clutch?

   YES NO

4. Can you view the solenoid state under the "Inputs/Outputs" screen of the DRBIII®?

   YES NO

.

Torque Reduction Request (TRD LINK)

The torque reduction output is also referred to as the torque reduction link. Torque reduction (TRD) output information is needed to reduce torque application to clutches involved with a particular transmission. The TRD is a wire between the PCM and TCM to request torque management. Torque management controls or reduces the torque output of the engine during certain shift sequences. Torque management is requested when the TCM pulses this signal to ground. When the PCM receives this code, it converts it into a command that shuts off a certain number of injectors and retards ignition timing slightly. The PCM also broadcasts this signal across the bus, back to the TCM. The bussed message is used to confirm the PCM has taken action. A faulty TRD link sets a DTC on certain modules. The customer may have a complaint about loss of power or of short shifting.

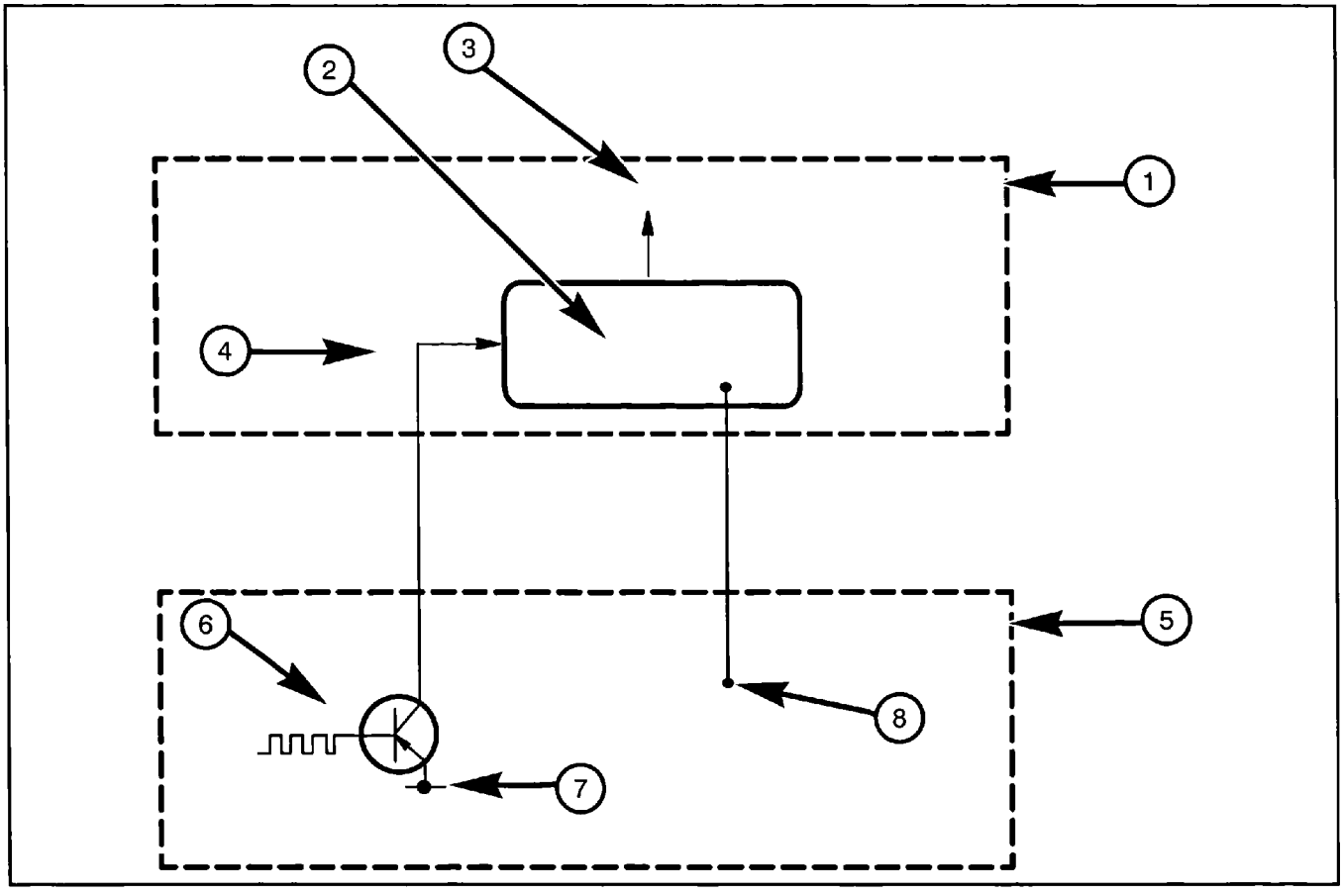

Figure 33 Torque Reduction Circuit

1	Powertrain Control Module	5	Transmission Control Module
2	Solid State	6	TRD Request
3	To Injector Control Circuitry	7	9V
4	TRD Request Sense	8	PCI Bus

INDIRECT OUTPUTS

Vehicle Speed Signal

The vehicle speed signal is taken from the output speed sensor. The TCM converts the input received from the output speed sensor into approximately 8,000 pulses per mile of vehicle travel and that signal is sent to the PCM. The PCM, in turn, sends the vehicle speed message across the communication bus to the BCM. The BCM sends this signal to the instrument cluster.

Pinion Factor (FWD Only)

The TCM applies the pinion factor before pulsing the vehicle speed signal to the PCM. The pinion factor is a combination of tire size and overall top gear ratio (OTGR). If no pinion factor is stored in the TCM, the speedometer does not indicate speed when the vehicle is moving. Additionally, selecting the wrong final drive ratio or tire size may cause the speedometer accuracy to fall out of specification.

Use the following procedure to set the pinion factor using the DRBIII® Scan Tool:

- Select "Transmission" then, "Miscellaneous", and then "Pinion Factor". The DRBIII® displays the current tire size.
- If the tire size is incorrect, press the Enter key and then select the correct tire size.
- Press Page Back to exit the procedure.

Caution: The above procedure must be performed if the TCM is replaced. Failure to perform the above procedure could result in an inoperative or improperly calibrated speedometer.

DRBIII® Communications

The TCM communicates with the DRBIII® scan tool across the bus. The DRBIII® connects to the bus by way of the data link connector (DLC). As you have seen, the DRBIII® can be used to actuate outputs, read sensors and capture freeze frame data. Additionally, the Pep Module may be used to perform pressure testing in place of gauges.

PCM (MIL Light)

When the PCM records a DTC for an OBDII emission or component malfunction, the MIL illuminates. The TCM commands illumination of the MIL for certain malfunctions. Refer to the Service Information for further information about what results in MIL illumination.

Per the OBD II mandate, any fault that effects shifting illuminates the MIL. Additionally, the PCM stores DTC P0700 "EATX Controller DTC Present".

Transmission Fluid Temperature

One of the indirect outputs from the TCM is the transmission fluid temperature. The PCM monitors the transmission fluid temperature at all times. If the transmission fluid temperature becomes excessive (greater than 275° F), the over-temperature indicator lamp illuminates. An electronic signal from either the PCM or TCM over the data bus is responsible for communicating over-temperature information to the instrument cluster. When the fluid temperature reaches 244° F the low speed radiator fan is turned ON. It is turned back OFF when the fluid temperature drops below 236° F. If the transmission fluid temperature reaches 250° F, then the high-speed radiator fan is turned ON. The high-speed radiator fan is turned back OFF when the temperature drops to 244° F or lower.

PRNDL Signal

The TCM provides output to the BCM indicating gear selector position. The TCM determines the position by monitoring the TRS. Through shift lever position (SLP) logic, the TCM can decipher the various combinations of open and closed gear position switches in the TRS, pressure switch input, and input/output speed data. Refer to the section titled SLP Logic for further information. The OD off indicator is controlled and receives electronic messages over the PCI data bus. The TCM is responsible for sending the electronic messages. The TCM continually monitors the OD off switch to determine the proper outputs to the transmission.

Notes:

MODULE 7 DIAGNOSTIC MANAGEMENT SYSTEM

DIAGNOSTIC CAPABILITIES

If one of the hydraulic, electronic or mechanical elements is experiencing a failure, the transmission/transaxle does not perform completely. If a failure occurs, it may or may not be very noticeable to the driver. A failure of an electronic component may result in symptoms most noticeable in the hydraulic/mechanical portion of the transmission/transaxle. Symptoms may be misleading if they are not diagnosed using a logical troubleshooting process.

The Diagnostic Readout Box (DRBIII® Scan Tool), in conjunction with Service Information, is used to diagnose the RFE series transmissions. If the TCM senses a problem in the system, a diagnostic trouble code (DTC) is stored in the TCM's memory. Any stored code remains in memory until erased by the technician or displaced by a more recent code.

Task Manager

The TCM is responsible for the operation of a large number of transmission/transaxle related components. It is designed to coordinate this operation as efficiently as possible. The TCM is responsible for determining if the diagnostic systems are operating properly. The software designed to carry out these responsibilities is called the Task Manager.

The Task Manager can be considered a "traffic cop" at the intersection of information at the TCM. This "traffic cop" determines which tests happen when they happen, and which functions go when. Many of the diagnostic steps required under OBDII must be performed under specific operating conditions. The Task Manager software organizes and prioritizes the diagnostic procedure. In short, the job of the Task Manager is to determine if conditions are appropriate for tests to be run, to monitor the parameters for a trip for each test, and to record the results of the test. Listed below are the responsibilities of the Task Manager software:

- Tests sequence
- Trip indicator
- Readiness indicator
- MIL illumination
- DTC identification
- Freeze frame data storage
- Similar conditions window

Trip Counters

Trips are criteria used to turn off the MIL. The DRBIII® displays this information under a trip counter. The California Air Resources Board (CARB) mandates that three good trips must occur to extinguish the MIL. The good trip counter can be seen on the DRBIII®.

Good Trips

CARB's definition of a good trip is as follows:

"Vehicle operation following an engine OFF period, of duration and driving mode, such that all components are monitored at least once by the diagnostic system except Catalyst Efficiency and Evaporative Monitoring when steady speed check is used..."

In simpler terms, all once per trip monitors must run within the limitations of the manufaturers defined "good trip". DaimlerChrysler has defined four good trip counters. They are as follows:

- Global good trip
- Fuel system good trip
- Misfire good trip
- Alternate good trip (appears as a global good trip on the DRBIII®)

Global Good Trip

Global good trips vary by vehicle and model year. To increment a global good trip, all monitors that run only once per trip must have run and passed.

Warm Up Cycles

Once the MIL is extinguished by the good trip counter, the PCM automatically switches to a warm up cycle counter. This can be viewed on the DRBIII®. Warm up cycles are used to erase DTCs. CARB requires that 40 warm up cycles must occur in order for the controller to self-erase a DTC. A warm up cycle, as defined by CARB, is as follows:

- Engine coolant temperature must cross 160°F.
- Engine coolant temperature must rise by 40°F.
- No further faults occur.
- Key cycles.

DTC Self Erasure

With one trip components or systems, the MIL is illuminated upon failure and DTCs are stored.

Two trip monitors are components requiring failure in two consecutive trips for MIL illumination. Upon failure of the first test, the Task Manager enters a maturing code. If the components fail the test for a second time, the code matures and a DTC is set.

After three good trips the MIL is extinguished and the Task Manager automatically switches the trip counter to a warm up cycle counter. DTCs are automatically erased following 40 warm up cycles if the component does not fail again.

DTCs can be erased anytime with the DRBIII®. Erasing the DTC with the DRBIII® erases all OBDII information. The DRBIII® automatically displays a warning that erasing the DTC erases all OBDII monitor data. This includes all counter information for warm up cycles, start cycles, trips and freeze frame data.

MIL Illumination

The PCM Task Manager carries out the illumination of the MIL. The Task Manager triggers MIL illumination upon test failure, depending on monitor failure criteria.

The DRBIII® shows both a requested state and actual state. When the MIL is illuminated, upon completion of a test for a third trip, the requested MIL state changes to OFF. The MIL continues to stay illuminated until the next key cycle. During the next key cycle for the third good trip, the requested MIL state is OFF, while the actual MIL state is ON. After the next key cycle, the MIL is not illuminated and both MIL states read OFF.

Hard Code

Any DTC set whenever the system or component is monitored is a HARD code. This means the problem is there every time the TCM checks the system or component. Some codes set immediately at start up and others require a road test under specific conditions.

One Trip Failures

A one trip failure, when read from the TCM, is a hard OBDII code that has not matured for the full 5 minutes. This applies to codes that only set after 5 minutes of substituted gear operation.

Starts Since Set Counter

For the most recent code, the starts since set counter counts the number of times the vehicle has started since it was last set. The counter counts up to 255 starts. Note that this code only applies to the last or more recent code set.

When there are no DTCs stored in memory, the DRBIII® displays NO DTCs PRESENT and the reset counter shows "STARTS SINCE CLEAR=XXX".

The number of starts helps determine if the DTC is hard or intermittent.

- If the count is less than three, the code is usually a hard code.
- If the count is greater than three, it is considered an intermitttent code. This means the engine has been started most of the time without the code recurring.

EATX EVENT DATA

Prior to 2000 model year, there was just one bank (set of values) in "EATX DTC Event Data" and data for only one occurrence of one saved DTC. If another DTC occurred, the old data was overwritten with new data. For 2000 model year 41TE/AE and 42LE and later, there are three banks of data. Bank 1 is the oldest DTC and data, bank 2 is newer DTC and data, and bank 3 is the newest DTC and data. If a fourth or fifth DTC occurs, only bank 3 is overwritten.

All RFE series transmissions only have the capacity for one bank of data. If another DTC occurs, the previous data is overwritten.

Use "EATX DTC Event Data" when a TCM DTC or one trip has occurred that is intermittent and cannot be duplicated, so that normal diagnostic procedures cannot be followed. Note that "EATX DTC Event Data" is erased if the battery is disconnected or when a quick learn is performed, so you may want to look at "EATX DTC Event Data" and write down some of the values before you disconnect the battery as part of diagnostics or repair.

The following pages provide step-by-step instructions to access the "EATX DTC Event Data" data display on the DRBIII®. Definitions for EATX can be found in the appendix at the end of the book.

How to use "EATX DTC Event Data"

For vehicles that support three banks of "EATX DTC Event Data" data, repeat the steps below for each bank of data stored in the TCM.

DRBIII® Release 53.0 or higher is required to view "EATX DTC Event Data".

Caution: "EATX DTC Event Data" is stored in the TCM and is erased if the DRBIII® Battery Disconnect function is performed.

With a DRBIII® at Release 53.0 or higher, the typical screens are shown.

1. Select 1. DRBIII Standalone.

```
Main Menu
1. DRB III Standalone
2. Connect to MDS2
3. Generic Scan Tool
4. PEP Module Tools
5. Run Memory Card Program
6. DRB Utilities
7. Vehicle Flash
8. Legacy MDS1 Support

Page    1 of   1

  HELP

  F1
```

1.1 Select 1. 1998-2000 Diagnostics

```
Standalone Menu
1. 1998 – 2001 Diagnostics
2. 1983 – 1997 Diagnostics
3. Vehicle Module Scan
4. Customer Preference
5. Junction Port Tool
6. MDS2 Data Recorder
7. Vehicle Flash

Page 1 of  1
  HELP          MAIN
                MENU
F1              F3
```

1.2 Select 2. Transmission.

```
Select System
1. Engine
2. Transmission
3. Body
4. Chassis
5. Anti Lock Brakes
6. Passive Restraints
7. Theft Alarm
8. System Monitors

Page 1 of  1
HELP    SYS     MAIN
        MENU    MENU
F1      F2      F3
```

1.3 Select 1. Transmission Module

```
Transmission Menu
1. Transmission Module
2. Transfer Case Module
3. Shift Lever Assembly

Page 1 of  1
  HELP    SYS     MAIN
          MENU    MENU
  F1      F2      F3
```

EATX Event Data

1.4 Select 9. Miscellaneous.

Select Function			
1. System Test			
2. DTCs & Related Functions			
3. Module Display			
4. Sensor Display			
5. Input/Output Display			
6. Monitor Display			
7. Custom Display			
8. Actuator Tests			
9. Miscellaneous			
Page 1 of 1			TCM
HELP	SYS MENU	MAIN MENU	
F1	F2	F3	

1.5 Select 9. EATX DTC Event Data.

SELECT MISCELLANEOUS FUNCTION			
1. Trans Overhauled/Replaced			
2. EATX TCM has been changed			
3. Pinion Factor			
4. TSB Entry			
5. Memory Monitor			
6. Battery Disconnect			
7. Quicklearn			
8. TCC Break-In			
9. EATX DTC Event Data			
Page 1 of 1			TCM
HELP	SYS MENU	MAIN MENU	
F1	F2	F3	

1.6 1998-1999 FWD

1999 and Up 45RFE

EATX DTC Event Data			
1. Event Data			
2. Error Counters			
3. Error Flags			
Page 1 of 1			TCM
HELP	SYS MENU	MAIN MENU	
F1	F2	F3	

1.6a 2000 and Up FWD

EATX DTC Event Data			
1. Bank 1			
2. Bank 2			
3. Bank 3			
Page 1 of 1			TCM
HELP	SYS MENU	MAIN MENU	
F1	F2	F3	

Note: **On vehicles with three banks of data, if bank 3 has data retained, it is always the most recent. Stated another way, if additional DTCs are set (greater than three faults), bank 3 has the event data for the most current DTC set.**

EATX Event Data

2. Under event data, read the DTC that triggered the "EATX DTC Event Data", and look it up in the Service Information to find the text description. DTCs displayed in event data are shown in "Hex" and SAE trouble code formats.

This DTC was set and caused:

DTC event data to

be stored in the TCM

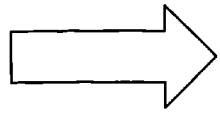

Event Data

Trigger DTC Hex	:	29
SAE Trouble Code	:	P0120
Starts Since prev DTC	:	0
TPS Deg	:	12.12°
TRS T1	:	CLOSED
TRS T3	:	OPEN
TRS T42	:	OPEN
TRS T41	:	OPEN
TRS Code	:	PARK

Page 1 of 6

HELP	SYS MENU	MAIN MENU
F1	F2	F3

3. Use event data to find out under what conditions the DTC occurred.
   3.1. If the DTC is the type that can set the MIL, use the DRB to check the engine controller's freeze frame, as this may have additional data for this DTC.
   3.2. Try to duplicate these conditions to see if you can duplicate the problem.
   3.3. Monitor vehicle sensors with DRB (use Monitors, Inputs/Output, or Sensor displays) to see what is failing.
   3.4. There are multiple screens of DTC Event Data. Not all are pertinent to every DTC. Some diagnostic sleuthing may be necessary to trim-down the list for a given DTC occurrence.
4. After vehicle is repaired, clear TCM and PCM DTCs, then perform DRB TCM Battery Disconnect (under Transmissions, 6. Miscellaneous) to clear "EATX DTC Event Data" memory.

ACTIVITY 7.1 MONITORS RFE SERIES

After reviewing the EATX DTC Event Data, complete the following charts. This activity gets you familiar with these screens and how they can help with diagnosis.

EVENT DATA

Trigger DTC Hex	_____
SAE Trouble Code	_____
Starts Since prev DTC	_____
TPS Deg	_____
TRS C5 (T2)	_____
TRS C4 (T1)	_____
TRS C3 (T3)	_____
TRS C2 (T42)	_____
TRS C1 (T41	_____

Page 1 of 6

EVENT DATA

TRS Code	_____
SLP Schedule in Use	_____
Engine RPM	_____
Input Speed	_____
Output RPM	_____
Engine Coolant Temp	_____
Trans Oil Temp	_____
LR/CC Pr SW	_____
2C Pr SW	_____

Page 2 of 6

EVENT DATA

O/D Pr SW	_____
4C Pr SW	_____
UD Pr SW	_____
Present Gear	_____
Target Gear	_____
Output Tooth CNT	_____
Sec. Since Shifted	_____
Cruise Control	_____
BRAKE	_____

Page 3 of 6

EVENT DATA

Autostick	_____
Last Shift From/To	_____
Clutch Applying LR/CC	_____
Clutch Applying 2C	_____
Clutch Applying OD	_____
Clutch Applying 4C	_____
Clutch Applying UD	_____
Clutch Applying MS	_____
Line Pressure	_____

Page 4 of 6

ACTIVITY 7.1 MONITORS (CONTINUED)

EVENT DATA

PCS Duty Cycle	_____
Des. Line Pressure	_____
Desired L/P Cntr	_____
Desired OpLp (Open Loop)	_____
Sec Since Start	_____

Page 5 of 6

ERROR FLAGS

SSV Stuck in L/R	_____
TRS Code Error	_____
SSV Stuck in TCC	_____
Thermistor Invalid	_____
Ratio Limp-in	_____

ERROR COUNTERS

TPS Open/Short	_____
TPS Intermittent	_____
Speed Ratio	_____
Num. Ratio Limp-ins	_____
Pressure Switch	_____
L/R Pressure Switch	_____
2C Pressure Switch	_____
OD Pressure Switch	_____
4C Pressure Switch	_____
UD Pressure Switch	_____
Next EMCC	_____
EMCC Status	_____

Page 6 of 6

MODULE 8 DIAGNOSTICS

TRANSMISSION SYSTEM DIAGNOSTIC PROCESS

It is important to use the diagnostic check sheet found on the following pages when performing any diagnosis on the 41/42 series and RFE series transmissions. There are two sides to this check sheet. Section one is to be completed by the Service Advisor. Once completed, this side of the check sheet provides you with overall information regarding the customer concern. By understanding the operation of the 41/42 and RFE series transmissions, this completed portion should provide you with some type of idea as to what the problem might be.

Note: It is important during any diagnosis to follow DaimlerChrysler's Six-Step Troubleshooting procedure in addition to specific procedures for correcting electronic transmission problems.

- Verify the customer concern
- Determine related symptoms
- Analyze the symptoms
- Isolate the problem
- Repair the problem
- Verify proper operation

Section two of the check sheet is to be completed by the person making the actual repair. By following all the steps outlined in the worksheet, you are not only following a repair path that should isolate the problem, but you are also keeping in line with the troubleshooting process:

- Verify the customer concern
- Perform a visual inspection
- Check TSBs
- Perform a shift lever test
- Read DTCs
- Flash, if necessary
- Perform a verification test

45RFE

45RFE HOTLINE: 1-800-520-8324

FAX this form to 1-417-864-8973

HOURS: M-F 6:30 AM - 5:00 PM CST

45RFE/545RFE TRANSMISSION DIAGNOSTIC PROCEDURES

45RFE

Dealer Name: _____ Code: _____ Date: _____

Contact Name: _____ Phone: (____)_____ WRO# _____

Last 8 digits of the VIN: _____ MDH: _____ **Vehicle Mileage:** _____

Trans fluid level: _____ Condition: _____ Repeat Complaint? Yes ☐ No ☐

Customer's complaint: _____

_____

Any previous transmission service (fluid/filter change) or repairs? Yes ☐ No ☐ If yes, list repairs and mileages:

_____

Concern intermittent? Yes ☐ No ☐ If yes, did you inspect & verify all electrical connections that apply? Yes ☐ No ☐

Clutch volumes (CVI): L/R_____ 2C_____ OD_____ 4C_____ UD_____

LINE PRESSURE	Desired	DRB "Actual"	Mech Gauge
Park @ 1500 RPM			
Drive @ 1500 RPM			
Rev @ 1500 RPM			

Shift lever test: Passed ☐ Failed ☐

TCM Part # _____

Will TCM reprogram? Yes ☐ No ☐

If yes, new Part # _____

Trans serial no. (if available): **TJ** __ __ __ __ __ __ __ __ __

Diagnostic trouble codes? **(DTCs)** In ***PCM:*** _____

In ***TCM:*** _____

What ***PCM*** trouble codes have you repaired? _____

Results of ***TCM*** DTC diagnostic tests: _____

_____

Did you check all TSBs that could apply? Yes ☐ No ☐

Are there any after-market electrical accessories installed on vehicle? Remote Starter ☐ Stereo System ☐

Other: _____

Prior to installing replacement trans, cooling system must be flushed using Miller tool 6906.
Note: Perform quick learn only if trans has been replaced or overhauled, or if the TCM has been replaced.

AUTHORIZATION NUMBER: _____ Authorized Repair/Comments: _____

_____

Return all replaced transmission assemblies through the Warranty Return System. Package all replaced repair parts. **Include a copy of this form with the part, and attach a copy on the outside of the shipping container.**

Ship replaced repair parts as directed on the Warranty Part Return Document.

DIAL P/N 00PM1581 Rev 4/01 **Each transmission repair must be packaged separately.** Form # 81-699-98100 Rev 4/01

45RFE **45RFE**

Notes:

ACTIVITY 8.1 DIAGNOSTICS

For this activity, you will use the DRBIII® scan tool in conjunction with the Service Information to diagnose the classroom vehicle transmission. Use the appropriate Diagnostic Procedures worksheet to complete this activity. Use the space below to take any additional notes.

Notes: _____

ACTIVITY 8.1 WORK ORDER

111 COMMERCE RD. • P.O. BOX 128
DETROIT, MI 48234 • REG, NO. F124352

REGISTRATION **REGISTRATION NO. F 120471**

Technicians 1.	The following estimate is accurate to the best of our ability to diagnose any inconsistencies or additional labor/parts that will arise during the performance of the actual repair of the vehicle will be billed accordingly.					Supply estimates are based upon stock and do not reflect possible variances in parts that may have to be special ordered.	
2. Parts Are New Unless Specified	Estimate Summary Parts | Labor	Total	Hours	Additions	Date Time	Estimate completed by: Authorized Representative	Parts Status Have No

Customer No.	Customer Name J. Smith		Card No.		Invoice No.
	Labor Rate	License No.	Mileage	Color	Stock No.
				Delivery Date	Delivery Miles
	Vehicle Model Current Model WJ				Production Date
Phone / Business Phone	VIN				

Customer says: The transmission shifts erratically and starts in all gears.

111 S. COMMERCE RD. • P.O. BOX 125 • DETROIT, MI 48234 • REG. NO. F124352

ACTIVITY 8.1 WORK ORDER (CONTINUED)

45RFE

45RFE HOTLINE: 1-800-520-8324

FAX this form to 1-417-864-8973

HOURS: M-F 6:30 AM - 5:00 PM CST

45RFE

45RFE/545RFE TRANSMISSION DIAGNOSTIC PROCEDURES

Dealer Name: _____ Code: _____ Date: _____

Contact Name: _____ Phone: (____)_____ WRO# _____

Last 8 digits of the VIN: _____ MDH: _____ **Vehicle Mileage:** _____

Trans fluid level: _____ Condition: _____ Repeat Complaint? Yes ☐ No ☐

Customer's complaint: _____

_____

Any previous transmission service (fluid/filter change) or repairs? Yes ☐ No ☐ If yes, list repairs and mileages:

_____

Concern intermittent? Yes ☐ No ☐ If yes, did you inspect & verify all electrical connections that apply? Yes ☐ No ☐

Clutch volumes (CVI): L/R_____ 2C_____ OD_____ 4C_____ UD_____

LINE PRESSURE	Desired	DRB "Actual"	Mech Gauge
Park @ 1500 RPM			
Drive @ 1500 RPM			
Rev @ 1500 RPM			

Shift lever test: Passed ☐ Failed ☐

TCM Part # _____

Will TCM reprogram? Yes ☐ No ☐

Trans serial no. (if available): **TJ**

If yes, new Part # _____

Diagnostic trouble codes? **(DTCs)** In ***PCM:***_____

In ***TCM:***_____

What ***PCM*** trouble codes have you repaired? _____

Results of ***TCM*** DTC diagnostic tests:_____

_____

Did you check all TSBs that could apply? Yes ☐ No ☐

Are there any after-market electrical accessories installed on vehicle? Remote Starter ☐ Stereo System ☐

Other:_____

Prior to installing replacement trans, cooling system must be flushed using Miller tool 6906.
Note: Perform quick learn only if trans has been replaced or overhauled, or if the TCM has been replaced.

AUTHORIZATION NUMBER: _____ Authorized Repair/Comments: _____

_____

Return all replaced transmission assemblies through the Warranty Return System. Package all replaced repair parts. **Include a copy of this form with the part, and attach a copy on the outside of the shipping container.**

Ship replaced repair parts as directed on the Warranty Part Return Document.

DIAL P/N 00PM1581 Rev 4/01 **Each transmission repair must be packaged separately.** Form # 81-699-98100 Rev 4/01

45RFE **45RFE**

After reviewing the EATX DTC Event Data, complete the following charts. This activity gets you familiar with these screens and how they can help with diagnosis.

EVENT DATA

Trigger DTC Hex	_____
SAE Trouble Code	_____
Starts Since prev DTC	_____
TPS Deg	_____
TRS C5 (T2)	_____
TRS C4 (T1)	_____
TRS C3 (T3)	_____
TRS C2 (T42)	_____
TRS C1 (T41	_____

Page 1 of 6

EVENT DATA

TRS Code	_____
SLP Schedule in Use	_____
Engine RPM	_____
Input Speed	_____
Output RPM	_____
Engine Coolant Temp	_____
Trans Oil Temp	_____
LR/CC Pr SW	_____
2C Pr SW	_____

Page 2 of 6

EVENT DATA

O/D Pr SW	_____
4C Pr SW	_____
UD Pr SW	_____
Present Gear	_____
Target Gear	_____
Output Tooth CNT	_____
Sec. Since Shifted	_____
Cruise Control	_____
BRAKE	_____

Page 3 of 6

EVENT DATA

Autostick	_____
Last Shift From/To	_____
Clutch Applying LR/CC	_____
Clutch Applying 2C	_____
Clutch Applying OD	_____
Clutch Applying 4C	_____
Clutch Applying UD	_____
Clutch Applying MS	_____
Line Pressure	_____

Page 4 of 6

EVENT DATA

PCS Duty Cycle	_____
Des. Line Pressure	_____
Desired L/P Cntr	_____
Desired OpLp (Open Loop)	_____
Sec Since Start	_____

Page 5 of 6

ERROR FLAGS

SSV Stuck in L/R	_____
TRS Code Error	_____
SSV Stuck in TCC	_____
Thermistor Invalid	_____
Ratio Limp-in	_____

ERROR COUNTERS

TPS Open/Short	_____
TPS Intermittent	_____
Speed Ratio	_____
Num. Ratio Limp-ins	_____
Pressure Switch	_____
L/R Pressure Switch	_____
2C Pressure Switch	_____
OD Pressure Switch	_____
4C Pressure Switch	_____
UD Pressure Switch	_____
Next EMCC	_____
EMCC Status	_____

Page 6 of 6

ACTIVITY 8.2 WORK ORDER

111 COMMERCE RD. • P.O. BOX 128

DETROIT, MI 48234 • REG, NO. F124352

REGISTRATION **REGISTRATION NO. F 120471**

Technicians 1.	The following estimate is accurate to the best of our ability to diagnose any inconsistencies or additional labor/parts that will arise during the performance of the actual repair of the vehicle will be billed accordingly.					Supply estimates are based upon stock and do not reflect possible variances in parts that may have to be special ordered.	
2. Parts Are New Unless Specified	Estimate Summary Parts | Labor	Total	Hours	Additions	Date Time	Estimate completed by: Authorized Representative	Parts Status ☐Have No

Customer No.	Customer Name		Card No.		Invoice No.
	Labor Rate	License No.	Mileage	Color	Stock No.
				Delivery Date	Delivery Miles
	Vehicle Model				Production Date
Phone / Business Phone	VIN				

Customer says: Transmission has erratic shift.

111 S. COMMERCE RD. • P.O. BOX 125 • DETROIT, MI 48234 • REG. NO. F124352

45RFE

ACTIVITY 8.2 WORK ORDER (CONTINUED)

45RFE HOTLINE: 1-800-520-8324

FAX this form to 1-417-864-8973

HOURS: M-F 6:30 AM - 5:00 PM CST

45RFE

45RFE/545RFE TRANSMISSION DIAGNOSTIC PROCEDURES

Dealer Name: _____ Code: _____ Date: _____

Contact Name: _____ Phone: (____) _____ WRO# _____

Last 8 digits of the VIN: _____ MDH: _____ **Vehicle Mileage:** _____

Trans fluid level: _____ Condition: _____ Repeat Complaint? Yes ☐ No ☐

Customer's complaint: _____

_____

Any previous transmission service (fluid/filter change) or repairs? Yes ☐ No ☐ If yes, list repairs and mileages:

_____

Concern intermittent? Yes ☐ No ☐ If yes, did you inspect & verify all electrical connections that apply? Yes ☐ No ☐

Clutch volumes (CVI): L/R_____ 2C_____ OD_____ 4C_____ UD_____

LINE PRESSURE	Desired	DRB "Actual"	Mech Gauge
Park @ 1500 RPM			
Drive @ 1500 RPM			
Rev @ 1500 RPM			

Shift lever test: Passed ☐ Failed ☐

TCM Part # _____

Will TCM reprogram? Yes ☐ No ☐

Trans serial no. (if available): **TJ**

If yes, new Part # _____

Diagnostic trouble codes? **(DTCs)** In ***PCM:*** _____

In ***TCM:*** _____

What ***PCM*** trouble codes have you repaired? _____

Results of ***TCM*** DTC diagnostic tests: _____

_____

Did you check all TSBs that could apply? Yes ☐ No ☐

Are there any after-market electrical accessories installed on vehicle? Remote Starter ☐ Stereo System ☐

Other:_____

Prior to installing replacement trans, cooling system must be flushed using Miller tool 6906.
Note: Perform quick learn only if trans has been replaced or overhauled, or if the TCM has been replaced.

AUTHORIZATION NUMBER: _____ Authorized Repair/Comments: _____

_____

Return all replaced transmission assemblies through the Warranty Return System. Package all replaced repair parts. **Include a copy of this form with the part, and attach a copy on the outside of the shipping container.**

Ship replaced repair parts as directed on the Warranty Part Return Document.

DIAL P/N 00PM1581 Rev 4/01 **Each transmission repair must be packaged separately.** Form # 81-699-98100 Rev 4/01

45RFE **45RFE**

After reviewing the EATX DTC Event Data, complete the following charts. This activity gets you familiar with these screens and how they can help with diagnosis.

EVENT DATA

Trigger DTC Hex	_____
SAE Trouble Code	_____
Starts Since prev DTC	_____
TPS Deg	_____
TRS C5 (T2)	_____
TRS C4 (T1)	_____
TRS C3 (T3)	_____
TRS C2 (T42)	_____
TRS C1 (T41	_____

Page 1 of 6

EVENT DATA

TRS Code	_____
SLP Schedule in Use	_____
Engine RPM	_____
Input Speed	_____
Output RPM	_____
Engine Coolant Temp	_____
Trans Oil Temp	_____
LR/CC Pr SW	_____
2C Pr SW	_____

Page 2 of 6

EVENT DATA

O/D Pr SW	_____
4C Pr SW	_____
UD Pr SW	_____
Present Gear	_____
Target Gear	_____
Output Tooth CNT	_____
Sec. Since Shifted	_____
Cruise Control	_____
BRAKE	_____

Page 3 of 6

EVENT DATA

Autostick	_____
Last Shift From/To	_____
Clutch Applying LR/CC	_____
Clutch Applying 2C	_____
Clutch Applying OD	_____
Clutch Applying 4C	_____
Clutch Applying UD	_____
Clutch Applying MS	_____
Line Pressure	_____

Page 4 of 6

EVENT DATA

PCS Duty Cycle	_____
Des. Line Pressure	_____
Desired L/P Cntr	_____
Desired OpLp (Open Loop)	_____
Sec Since Start	_____

Page 5 of 6

ERROR FLAGS

SSV Stuck in L/R	_____
TRS Code Error	_____
SSV Stuck in TCC	_____
Thermistor Invalid	_____
Ratio Limp-in	_____

ERROR COUNTERS

TPS Open/Short	_____
TPS Intermittent	_____
Speed Ratio	_____
Num. Ratio Limp-ins	_____
Pressure Switch	_____
L/R Pressure Switch	_____
2C Pressure Switch	_____
OD Pressure Switch	_____
4C Pressure Switch	_____
UD Pressure Switch	_____
Next EMCC	_____
EMCC Status	_____

Page 6 of 6

ACTIVITY 8.3 WORK ORDER

111 COMMERCE RD. • P.O. BOX 128
DETROIT, MI 48234 • REG, NO. F124352

REGISTRATION **REGISTRATION NO. F 120471**

Technicians 1.	The following estimate is accurate to the best of our ability to diagnose any inconsistencies or additional labor/parts that will arise during the performance of the actual repair of the vehicle will be billed accordingly.					Supply estimates are based upon stock and do not reflect possible variances in parts that may have to be special ordered.	
2. Parts Are New Unless Specified	Estimate Summary Parts | Labor	Total	Hours	Additions	Date Time	Estimate completed by: Authorized Representative	Parts Status ☐Have ☐No

Customer No.	Customer Name		Card No.		Invoice No.
	Labor Rate	License No.	Mileage	Color	Stock No.
				Delivery Date	Delivery Miles
	Vehicle Model				Production Date
Phone / Business Phone	VIN				

Customer says: The transmission shifts erratically.

111 S. COMMERCE RD. • P.O. BOX 125 • DETROIT, MI 48234 • REG. NO. F124352

45RFE

ACTIVITY 8.3 WORK ORDER (CONTINUED)

45RFE HOTLINE: 1-800-520-8324

FAX this form to 1-417-864-8973

HOURS: M-F 6:30 AM - 5:00 PM CST

45RFE

45RFE/545RFE TRANSMISSION DIAGNOSTIC PROCEDURES

Dealer Name: _____ Code: _____ Date: _____

Contact Name: _____ Phone: (____) _____ WRO# _____

Last 8 digits of the VIN: _____ MDH: _____ **Vehicle Mileage:** _____

Trans fluid level: _____ Condition: _____ Repeat Complaint? Yes ❒ No ❒

Customer's complaint: _____

_____

Any previous transmission service (fluid/filter change) or repairs? Yes ❒ No ❒ If yes, list repairs and mileages:

_____

Concern intermittent? Yes ❒ No ❒ If yes, did you inspect & verify all electrical connections that apply? Yes ❒ No ❒

Clutch volumes (CVI): L/R_____ 2C_____ OD_____ 4C_____ UD_____

LINE PRESSURE	Desired	DRB "Actual"	Mech Gauge
Park @ 1500 RPM			
Drive @ 1500 RPM			
Rev @ 1500 RPM			

Shift lever test: Passed ❒ Failed ❒

TCM Part # _____

Will TCM reprogram? Yes ❒ No ❒

Trans serial no. (if available): **TJ**

If yes, new Part # _____

Diagnostic trouble codes? **(DTCs)** In ***PCM:*** _____

In ***TCM:*** _____

What ***PCM*** trouble codes have you repaired? _____

Results of ***TCM*** DTC diagnostic tests: _____

_____

Did you check all TSBs that could apply? Yes ☐ No ☐

Are there any after-market electrical accessories installed on vehicle? Remote Starter ☐ Stereo System ☐

Other:_____

Prior to installing replacement trans, cooling system must be flushed using Miller tool 6906.
Note: Perform quick learn only if trans has been replaced or overhauled, or if the TCM has been replaced.

AUTHORIZATION NUMBER: _____ Authorized Repair/Comments: _____

_____

Return all replaced transmission assemblies through the Warranty Return System. Package all replaced repair parts. **Include a copy of this form with the part, and attach a copy on the outside of the shipping container.**

Ship replaced repair parts as directed on the Warranty Part Return Document.

DIAL P/N 00PM1581 Rev 4/01 **Each transmission repair must be packaged separately.** Form # 81-699-98100 Rev 4/01

45RFE **45RFE**

After reviewing the EATX DTC Event Data, complete the following charts. This activity gets you familiar with these screens and how they can help with diagnosis.

EVENT DATA

Trigger DTC Hex	_____
SAE Trouble Code	_____
Starts Since prev DTC	_____
TPS Deg	_____
TRS C5 (T2)	_____
TRS C4 (T1)	_____
TRS C3 (T3)	_____
TRS C2 (T42)	_____
TRS C1 (T41	_____

Page 1 of 6

EVENT DATA

TRS Code	_____
SLP Schedule in Use	_____
Engine RPM	_____
Input Speed	_____
Output RPM	_____
Engine Coolant Temp	_____
Trans Oil Temp	_____
LR/CC Pr SW	_____
2C Pr SW	_____

Page 2 of 6

EVENT DATA

O/D Pr SW	_____
4C Pr SW	_____
UD Pr SW	_____
Present Gear	_____
Target Gear	_____
Output Tooth CNT	_____
Sec. Since Shifted	_____
Cruise Control	_____
BRAKE	_____

Page 3 of 6

EVENT DATA

Autostick	_____
Last Shift From/To	_____
Clutch Applying LR/CC	_____
Clutch Applying 2C	_____
Clutch Applying OD	_____
Clutch Applying 4C	_____
Clutch Applying UD	_____
Clutch Applying MS	_____
Line Pressure	_____

Page 4 of 6

EVENT DATA

PCS Duty Cycle	_____
Des. Line Pressure	_____
Desired L/P Cntr	_____
Desired OpLp (Open Loop)	_____
Sec Since Start	_____

Page 5 of 6

ERROR FLAGS

SSV Stuck in L/R	_____
TRS Code Error	_____
SSV Stuck in TCC	_____
Thermistor Invalid	_____
Ratio Limp-in	_____

ERROR COUNTERS

TPS Open/Short	_____
TPS Intermittent	_____
Speed Ratio	_____
Num. Ratio Limp-ins	_____
Pressure Switch	_____
L/R Pressure Switch	_____
2C Pressure Switch	_____
OD Pressure Switch	_____
4C Pressure Switch	_____
UD Pressure Switch	_____
Next EMCC	_____
EMCC Status	_____

Page 6 of 6

Notes:

GLOSSARY

DIAGNOSTIC TROUBLE CODE (DTC): A DTC is a two-digit number (P-code) stored in the powertrain control module memory, indicating a malfunction with the transmission/transaxle or its control system. Obtained by using the DRBIII® scan tool. The DRBIII® retrieves and displays the code(s).

DUTY CYCLE: The product of the pulse duration and pulse frequency of a pulse carrier, equal to the time per second that pulse power is applied.

HERTZ: The frequency of an event (cycles per second).

LAND: Flat surface(s) on a valve which cause the valve to be moved to the left or right when the fluid pressure pushing against the land is high enough to overcome spring pressure, causing an up shift or down shift.

LIMP-IN: A condition where the powertrain control module shuts off the internal controls of the transmission/transaxle to prevent or reduce the chance of internal transmission/transaxle damage.

OIL PUMP: The oil pump is a hydraulic pump used to circulate fluid under pressure to apply clutches, lubricate components, and cool the transmission.

OVERDRIVE: Overdrive is a gear range in the transmission/transaxle with an output speed greater than its input speed. For example, every 0.75 revolutions of input, the output rotates 1 revolution (0.75:1).

OVERDRIVE CLUTCH: Located in the reverse/overdrive clutch assembly, the overdrive clutch is used in Third gear, and Fourth gear.

PORT: The port is an opening in a valve through which fluid flow is controlled to the various clutches and brakes when the port opens or closes.

REACTION PLATE: The reaction plate is a component within a clutch assembly that, when applied, backs up or retains the pressure exerted on the clutch pack from the hydraulic pressure force of the piston.

RETURN SPRING: The return spring is located in the reverse/overdrive clutch, and is used to help release the overdrive clutch piston.

REVERSE CLUTCH: The reverse clutch is located in the reverse/overdrive clutch and is used in Reverse only.

GLOSSARY (CONTINUED)

SOLENOID/PRESSURE SWITCH ASSEMBLY: The solenoid/pressure switch assembly is an electrical component comprised of a series winding, hollow iron cores and a movable spring-loaded plunger or rod. When energized, or turned on, it creates a magnetic field that moves the plunger against spring pressure. It converts electrical energy into mechanical force and movement and is used in the transmission/transaxle to open or close a valve.

TORQUE MULTIPLICATION: The ability of a component, such as a torque converter or gear set, to increase output torque above input torque. For a torque converter, it refers to the amount of torque at the input shaft above what the engine puts out.

TRANSMISSION/TRANSAXLE RANGE SENSOR: The transmission/transaxle range sensor is a component that allows for accurate transmission gear position measurement.

UNDERDRIVE CLUTCH: Located on the input shaft, the underdrive clutch is used in all gear ranges except Park, Reverse, Neutral, and Fourth.

VALVE BODY: The valve body is a component of an automatic transmission/transaxle that contains the hydraulic valves and accumulators. The valves are shifted to apply friction elements that control planetary gear set components.

VENT: Holes in the clutch packs that allow fluid to be vented.

APPENDIX

EATX DTC EVENT DATA: EVENT DATA DEFINITIONS RFE SERIES

1. Trigger DTC Hex and SAE Trouble Code

TCM DTC or 1-trip that cause the EATX DTC Event Data to be stored. Anything other than 00 or FF means this DTC Event data bank has valid data stored in it. The DRB displays the DTC in hex, so you can look up the P-code and name below:

2. Starts since prev DTC

Number of times the engine was started and run for at least 10 seconds with no TCM DTCs or 1-trip before this DTC occurred. If this is zero or less than 10, then DTCs are occurring often and are more likely to be repeatable. If 10 or more, then DTCs are occurring less often and may be harder to duplicate.

3. TPS Deg.

Throttle Position Sensor degrees. 0 with closed throttle, around 80 with wide open throttle, set to 24 if throttle data is found to be invalid or PCM is not providing voltage to the throttle (ex. with the engine off and the key in the unlock position). Try to repeat problems using this throttle angle.

4. TRS C5 (T2)

Transmission Range Sensor C5 switch state. For 45RFE, normally closed in P, M2, M1. See comments under TRS code.

5. TRS C4 (T1)

Transmission Range Sensor C4 switch state. For 45RFE, normally closed in N2, D, M2. See comments under TRS code.

6. TRS C3 (T3)

Transmission Range Sensor C3 switch state. For 45RFE, normally closed in N1, N2, D, M1. See comments under TRS code.

7. TRS C2 (T42)

Transmission Range Sensor C2 switch state. For 45RFE, normally closed in P, R, N1, N2. See comments under TRS code.

8. TRS C1 (T41)

Transmission Range Sensor C1 switch state. For 45RFE, normally closed in P, N1, N2. See comments under TRS code.

EATX Definitions – continued RFE Series

9. TRS Code

Unfiltered Shift Lever Position (SLP) from decoded value of the combination of Transmission Range Sensor switch states. Try to repeat the problem using this SLP. With TRS DTC P0705 (Hex 28) or any TRS error flag true, sweep shifter through this area to try to repeat. Look for switch states that don't match proper state for actual SLP.

Note: That once the TRS Data Error Matured flag is set to true and DTC 0705 (Hex 28) is set (turning all PRNDL lights are on in an electric instrument cluster), this DTC does not set again (even after DTCs are cleared) until this Error flag is cleared. This is done by running the engine with shifter in Drive (41TE/42LE also 3/A) with no TRS or pressure switch errors. C4 (T1), C5 (T2), C3 (T3) means the TRS was in a valid transition region between gated shifter positions. Errors may occur in or between gated positions, and can be due to invalid or out-of-order switch states.

Normal 45RFE TRS Switch States in Order

	Park	TR1	Reverse	TR2	Neutral 1	Neutral 2	TR3	Drive	TR4	Manual 2	TR5	Manual 1
C5 (T2)	Cl	Cl	Op	Op	Op	Op	Op	Op	Op	Cl	Cl	Cl
C4 (T1)	Op	Op	Op	Op	Op	Cl	Cl	Cl	Cl	Cl	Op	Op
C3 (T3)	Op	Op	Op	Cl	Cl	Cl	Cl	Cl	Op	Op	Op	Cl
C2 (T42)	Cl	Cl	Cl	Cl	Cl	Cl	Cl	Op	Op	Op	Op	Op
C1 (T41)	Cl	Op	Op	Op	Cl	Cl	Op	Op	Op	Op	Op	Op

10. Engine RPM

RPM from engine crank sensor. See if DTC occurred idling, or under higher RPM's. With speed sensor or ratio fault, see if RPM dropped to 0 or is consistent with other speed values.

EATX Definitions – continued RFE Series

11. Input Speed

RPM from input (turbine) speed sensor. With speed sensor or ratio fault, see if RPM dropped to 0 or is consistent with other speed values:

In Park/Neutral, Input Speed should equal engine speed.

In R/1/2/3/4, Input Speed should equal output speed times the gear ratio (or 0 at a stop).

45RFE Gear Ratios:

Rev	3.00
1st	3.00
2nd	1.67
2 prime	1.50
3rd	1.00
4th	0.75
5th	0.67

In R/1/2/3/4, Input Speed should equal engine speed with torque converter clutch fully on (LU), and have some small (0-600) difference from engine speed otherwise.

12. Output RPM

RPM from output speed sensor. Output speed is proportional to vehicle speed (rough rule of thumb is 1 MPH=50 Output RPM), so try to repeat problems at this speed. With speed sensor or ratio fault, see if RPM dropped to 0 or is consistent with other speed values.

13. Engine Coolant Temp

Engine Coolant Temp Sensor value (received from PCM over communications bus). See if problem occurred with cold or hot engine. **Note:** Value set to -4 if engine is not running or it is too soon (up to 10 seconds) after start for data to be received.

14. Trans Oil Temp

Transmission Sump Oil Temperature. See if problem occurred with cold or hot transmission. **Note:** Value set to -4 if engine is not running or it is too soon (up to 10 seconds) after start for data to be received. Normally this contains data from the transmission thermistor, but if the thermistor data is invalid, this contains a calculated value. Check 'Therm. Invalid' under Error Counters and Flags in this document.

EATX Definitions – continued RFE Series

15. LR/CC Pr SW

LR/CC Pressure switch value. See below. For 45RFE, normally closed in P, N, First. See comments under O/D Pr Sw.

16. 2C Pr SW

2CPressure switch value. For 45RFE, normally closed in Second and 4prime. See comments under O/D Pr Sw.

17. 4C Pr SW

4C Pressure switch value. For 45RFE, normally closed in 2prime, Fourth. See comments under O/D Pr Sw.

18. UD Pr SW

UD Pressure switch value. For 45RFE, normally closed in First, Second, 2prime, Third. See comments under O/D Pr Sw.

19. O/D Pr SW

O/D Pressure switch value. With engine running, should be consistent with the gear the transmission is in. However, these can sometimes be misleading if the transmission is testing this circuit or smoothing out a shift. Most useful with pressure switch errors to see if switch is stuck open or closed. Note: Should be all open with engine off (i.e. pump not running, so no pressure), and all closed if the TCM relay is open (switched battery also reads 0 volts). Otherwise, for 45RFE, O/D Pr SW is normally closed in Third and Fourth and 4prime.

20. SLP Schedule in Use

Shift Lever Position being used to schedule shifts. Calculated value based on TRS code and pressure switch data. Should be consistent with TRS Code and other data (except Park and Neutral are both treated as hydraulic Neutral). Try to repeat problems using this SLP. With TRS DTC P0705 (Hex 28) or any TRS error flag true, sweep shifter through this area to try to repeat.

21. Applying 2C Clutch

Yes means TCM was trying to apply this solenoid. Normally applied in Second with shifter in D and in Fifth. See comments under Applying UD Clutch.

22. Applying 4C Clutch

Yes means TCM was trying to apply this clutch/solenoid. Normally applied in 2prime and Fourth. See comments under Applying UD Clutch.

EATX Definitions – continued RFE Series

23. Applying LR/CC Clutch

Yes means TCM was trying to turn on this clutch/solenoid. Normally applied in LU, P/N, First. however, this clutch is released in First gear above 150 outout RPM (unless shifter is in M1) and reapplied below 100 output RPM. See comments under Applying UD Clutch.

24. Applying MS Clutch

This is not really a clutch. MS is a normally applied solenoid so Yes means the TCM was trying to turn off this solenoid. Pressure from the MS solenoid is routed through the manual valve to apply the LR Clutch in R, the OD clutch with the shifter=D, and the 2C clutch with the shifter=M2 or M1. Normally applied in N, R, and Third, Fourth, and Fifth with shifter=D and Second with shifter=M2 or M1. See comments under Applying UD Clutch.

25. Applying OD Clutch

Yes means TCM was trying to apply this solenoid. For 45RFE, normally applied in Third and Fourth and Fifth with shift=M2 or M1. See comments under Applying UD Clutch.

26. Applying UD Clutch

Because the UD is normally applied solenoid a Yes means the TCM was trying to apply this clutch or turn off this solenoid. Normally applied in P/N, R, First, Second, 2prime, Third. In P/N and R, the UD solenoid does not receive any hydraulic pressure from the manual valve, so the UD clutch cannot be applied even if this entry reads Yes. Note: However, these can sometimes be misleading if the transmission is testing this circuit or smoothing out a shift. Just because the TCM is temporarily "applying a clutch" using its outputs doesn't mean the clutch is fully applied. Normally applied in P, R, First, Second, 2prime, Third.

27. Last shift from/to

Last gear change the TCM performed or was performing when 'EATX DTC Event Data' was stored. If "Sec. Since Shifted" is small, attempt this shift when trying to recreate the problem. This parameter does not indicate shifts to Neutral. At startup (before shifting out of Park or Neutral) last shift reads First to Second.

28. Present Gear

Gear the transmission was in when the problem occurred. This is not updated until after a shift is completed, so that for example during a 1-2 shift this indicates First gear while Target Gear (below) indicates Second gear. Drive in this gear when attempting to recreate the problem.

EATX Definitions – continued RFE Series

29. Target Gear

Gear the transmission was shifting into when the problem occurred. If not the same as "Present Gear", attempt shifting from Present to Target gear when trying to recreate the problem.

30. Sec. Since Start

Seconds since engine was started or ignition was turned on. See if problem occurs at start up or much later.

31. Output Tooth Cnt

Number of Output Tooth Counts since TCM installation, quicklearn, or T/C break-in reset. Rough indication of mileage when problem happened. Rough rule of thumb is 1 mile per Output Tooth Cnt., but as vehicle mileage increases, this approximation gets increasingly incorrect. Compare to current output tooth count under "T/C Clutch Break-in Status" on DRB to tell approx. miles since problem occurred.

32. Sec. Since Shifted

Seconds since last shift. Use to see if problem occurs during or just after a shift. If no shift has occurred since start or ignition on, is the same as "Sec. Since Start."

33. Cruise Control

Cruise Control Engaged/Not Engaged. Duplicate when trying to recreate problem.

34. Brake

Brake Applied/Not Applied. Duplicate when trying to recreate problem.

35. Autostick

Note: Autostick is not currently active on RWD transmissions. Features that are not active report "Not Active". If and when available Autostick feature active (shifter in A/S position and no A/S switch or overheat problems)/Inactive. Duplicate when trying to recreate problem.

EATX Definitions – continued RFE Series

36. Line Pressure

Line Pressure Sensor Reading. May not be valid unless engine is running. Most important with a line pressure DTC (Hex C8,C9,CA, or CB) or presure switch check DTC (Hex 81, 82, 84, 88, or 90). Compare to desired line pressure. Note: Line pressure from 0 to 30 displays as 30 psi.

37. PCS Duty Cycle

Line Pressure Control Solenoid Duty Cycle, values are expressed as a percentage (%). Low duty cycle should produce high line pressure. Increasing duty cycle should decrease line pressure Most important with a line pressure DTC (C8/P1720, C9/P1722, CA/P1721, CB/1724).

38. Des. Line Press

Desired (Target) Line Pressure. Most important with a line pressure DTC (C8/P1720, C9/P1722, CA/P1721, CB/1724). Compare to line pressure.

39. Des. L/P Cntr

Counter that adjusts minimum desired line pressure to avoid slip while in gear. Not in PSI, but a value from 0-64. The higher this value, the more extra line pressure was needed to avoid slip. Most important with a line pressure DTC (C8/P1720, C9/P1722, CA/P1721, CB/1724).

40. Des. L/P OpLp

Desired Line Pressure Open Loop Error Counter. Not in PSI, but a value from 0-6. If non-zero, a line pressure sensor error has occurred AND slip is occurring at the current pressure, so pressure must be increased to avoid further slip. Most important with a line pressure DTC (C8/P1720, C9/P1722, CA/P1721, CB/1724).

EATX Definitions – continued RFE Series

EATX DTC Event Data Error Counters (EC)

1. TPS Open/Short – Throttle Position Sensor circuit open or shorted to ground or power where Non-zero=problem
2. TPS Intermittent – Throttle Position Sensor circuit intermittent (noisy/excessive changes) where Non-zero=possible problem, or may be caused by driver rapidly stabbing the throttle.
3. Speed Ratio – speed ratio error where Non-zero=possible problem, but may increment some during normal shifting. Check gear information above and ratio of Input divided by Output speed. Check speed sensors and do clutch test on clutches for gears stored above.
4. Pressure Switch – pressure switch error, this contains the maximum of all individual pressure switch EC's. Non-zero=possible problem here, but may increment when TCM tests the switch. See below for which pressure switch circuit has possible error, then check.
5. Num. Ratio Limp-Ins – Number of Logical (relay still closed) Limp-Ins since engine started due to speed ratio error. Non-zero=problem here. See comments under Speed Ratio EC.
6. Pressure Switch – Pressure Switch error, this contains the maximum of all the individual pressure switch EC's (except for any which have reached the maximum value of 255). Non-zero=possible problem here, but may increment when TCM test the switch, particularly if some pressure switch Ecs are at 255. See below for which pressure switch circuit has possible error, then check.
7. L/R Pressure Switch – L/R Pressure Switch Error where Non-zero=possible problem. Check this pressure switch circuit.
8. 2C Pressure Switch – 2C Pressure Switch Error where Non-zero=possible problem. Check this pressure switch circuit.
9. OD Pressure Switch – O/D Pressure Switch Error where Non-zero=possible problem. Check this pressure switch circuit.
10. 4C Pressure Switch - 4C Pressure Switch Error where Non-zero=possible problem. Check this pressure switch circuit.

EATX Definitions – continued RFE Series

EATX DTC Event Data Error Counters (EC)

11. UD Pressure Switch - UD Pressure Switch Error where Non-zero=possible problem. Check this pressure switch circuit.
12. Next EMCC - Target Torque Converter Clutch (CC) state. This is not updated until the new CC state is completed, so for example when trying to change from UL to PL, this indicates PL while EMCC Status (below) still indicates UL. Duplicate when trying to recreate problem. Output speed, gear, and throttle are main inputs to determine CC state.
13. EMCC Status - Present Torque Converter Clutch (CC) state. Duplicate when trying to recreate problem. Output speed, gear, and throttle are main inputs to determine CC state.

EATX Definitions – continued RFE Series

EATX DTC Event Data Error Flags (EF)

1. SSV Stuck in L/R – Solenoid Switch Valve stuck in LR position flag where Yes=problem. Check pressures esp. L/R. Do 1-2 and 2-1 shifts. May be Solenoid Switch valve or other valve body problem. See diagnostics for P1776 (Hex 47).
2. TRS Code Error – TRS Code Error Matured Flag (PDE). When true, also sets TRS DTC P0705 (Hex 28) and turn all PRNDL indicators on in electronic instrument clusters. True=problem here. Perform shifter test and carefully check TRS switch readings in or next to TRS positions shown in the DTC Event Data bank that contained the TRS DTC. Note: Once the TRS Data Error Matured flag is set to true and DTC P0705 (Hex 28) is set (turning all PRNDL lights are on in an electronic cluster), this DTC does not set again (even after DTCs are cleared) until this error flag is cleared. This is done by running the engine with shifter in Drive with no TRS or pressure switch errors. Errors may occur in or between gated positions, and can be due to invalid or out-of-order switch states.
3. SSV Stuck in TCC – Solenoid Switch Valve stuck in TCC position flag where Yes=problem. Check pressures esp. L/R. Do 1-2 and 2-1 shifts. See if vehicle sticks in Second gear. May be Solenoid Switch valve or other valve body problem. See diagnostics for P1775 (Hex 37).
4. Therm. Invalid – Transmission oil sump temperature thermistor invalid flag. True=problem here. Check thermistor circuit. See diagnostics for P1779 (Hex 74). Check "EATX DTC Event Data" for sec. Since start and engine coolant and air temperatures to see if this is a cold or hot problem, or occurs in a certain shift position. Check "EATX DTC Event Data" thermistor voltage to see if fails high, low, or intermittent.
5. Ratio Limp-In – TCM in Logical (relay still closed) Limp-in due to speed ratio error flag where Set=problem. See comments under Speed Ratio EC.

Notes:

DaimlerChrysler Corporation

UNITED STATES

The special service tools referred to herein are required for certain service operations. These special service tools or their equivalent, if not obtainable through a local source, are available through the following outlet.

28635 Mound Road, Warren, Michigan 48092, U.S.A.

MILLER SPECIAL TOOLS
OTC Division, SPX Corporation

Telephone 1-800-801-5420 FAX 1-800-578-7375

CANADA

The special service tools referred to herein are required for certain service operations. These special service tools or their equivalent, if not obtainable through a local source, are available through the following outlet.

C & D Riley Enterprises Ltd., P.O. Box 243, Amherstburg, Ontario N9V 2Z4
Telephone (519) 736-4600 FAX (519) 736-8433

The special tools referred to herein are required for certain service operations. These special service tools or their equivalent, if not obtainable through a local source, are available through the following outlet.

MILLER SPECIAL TOOLS **OTC Division, SPX Corporation** 28635 Mound Road, Warren, MIchigan 48092, U.S.A. Telephone 01-810-582-5831420 FAX 01-810-582-5830	**SPX Australia** 7 Expo Court Mt. Waverly/Victoria Australia 3149 FAX: 61-3-9544-5222	**Jurubatech** AV. N. SRA. DoSabara 4901 Sao Paulo Brazil FAX: 55-11-246-2793
SPX UK Churchill Way, High March Daventry, Northants, NN11 4NFI Tel: 44-1327-303400 FAX: 44-1327-871625	**Jatek** 5-53 Minowacho 2-Chome Kohoku-Ko Yokohama, Kanagawa 223-0051 Japan FAX: 81-45-562-7800	**SPX De Mexico** AV. Cafetales 1702, Despacho 204 Col. Haciendi de Coyoacan C.P. 04970 Mexico FAX: 525-603-0567

WE ENCOURAGE
PROFESSIONALISM

THROUGH TECHNICIAN
CERTIFICATION

TRAINING PROGRAM
DEVELOPMENT DEPARTMENT

DaimlerChrysler Corporation

81-699-01149

LITHO IN U.S.A.